US-IF007-WH-X

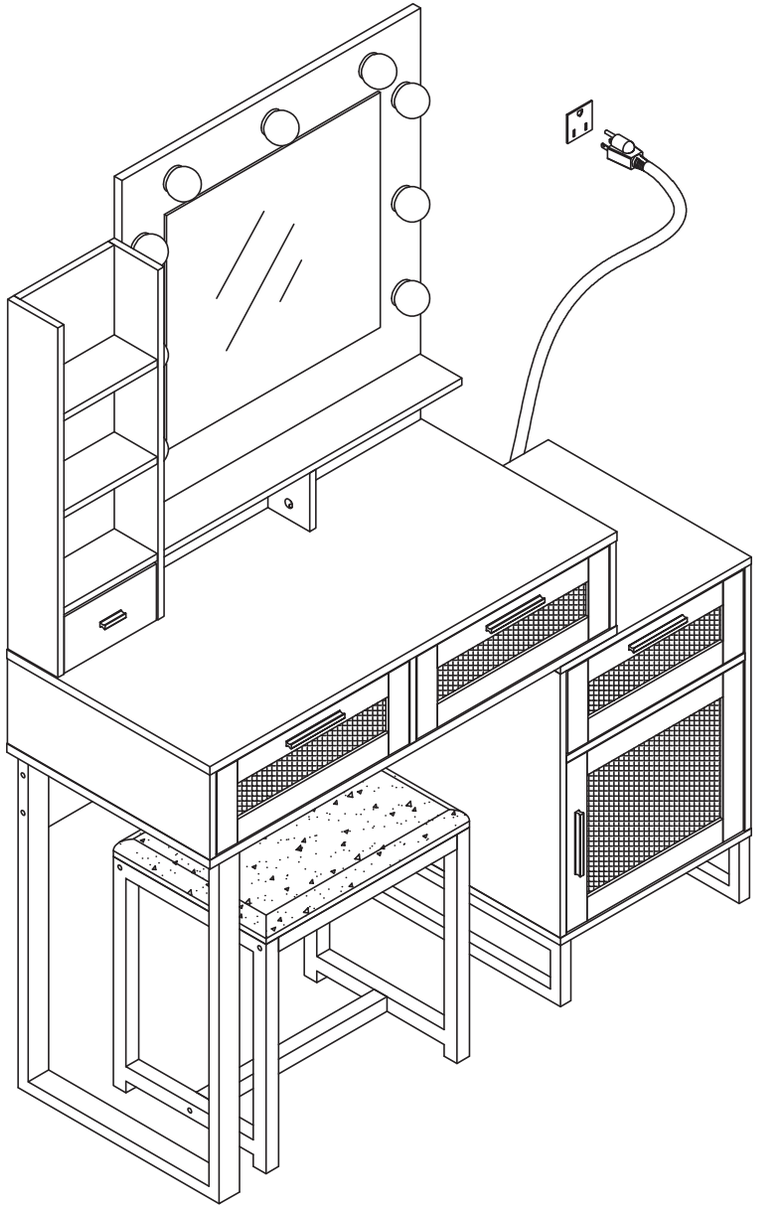

A 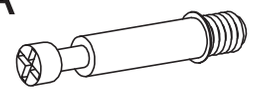 Ø6x35mm 51 (+2)pcs	B Ø15x10mm (+2)pcs	C Ø6x30mm 50 (+1)pcs	D Ø4x35mm 36(+2)pcs	E 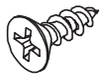 Ø3.5x12mm 39 (+2)pcs	F Ø6x30mm 6pcs	G 2pcs
H 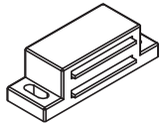 1pc	I 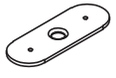 1pc	J 4mm 1pc	K 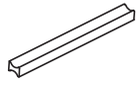 3pcs	L 6 pcs	M 2pcs	N 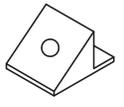 12pcs
O Ø3x16mm 14 pcs	P 2pcs	Q 5pcs	R 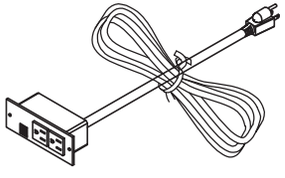 1pc	S 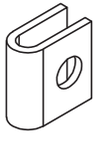 1pc	T 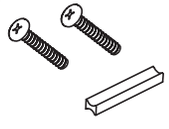 1pc	
U Ø6x70mm 2pcs	V 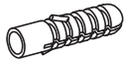 2pcs	W Ø8x22mm 2pcs	X Ø6x16mm 2pcs	Y 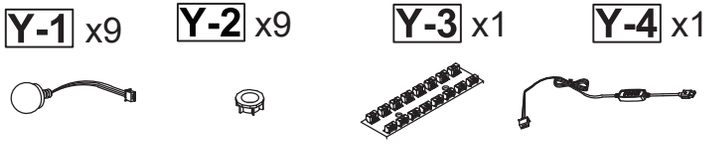 Y-1 x9 Y-2 x9 Y-3 x1 Y-4 x1 1set		
Z Ø6x40mm 6pcs	AA Ø4x35mm 4pcs	CL 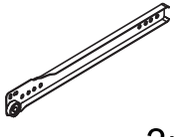 3pcs	CR 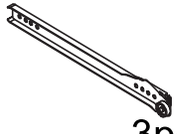 3pcs	DL 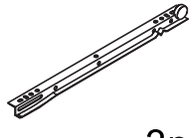 3pcs	DR 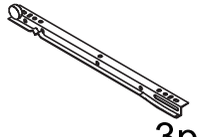 3pcs	

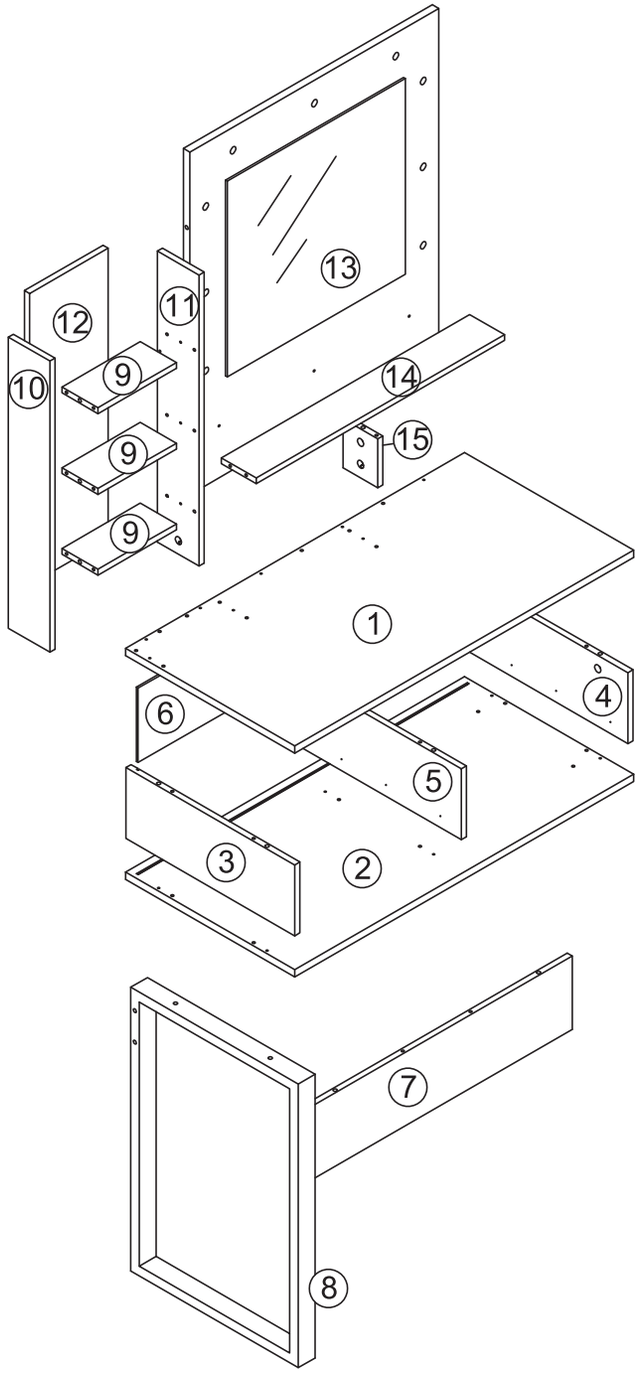

① x1 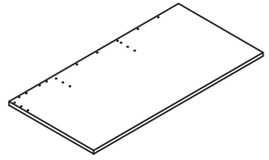	② x1 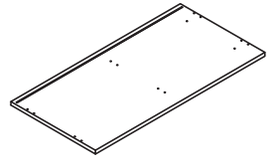	③ x1 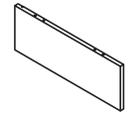
④ x1 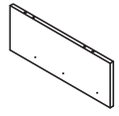	⑤ x1 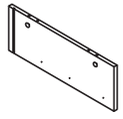	⑥ x1 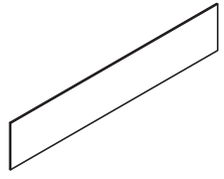
⑦ x1 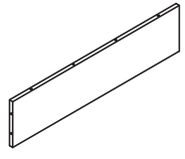	⑧ x1 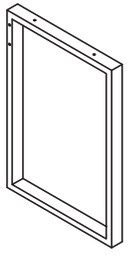	⑨ x3 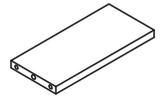
⑩ x1	⑪ x1 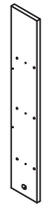	⑫ x1 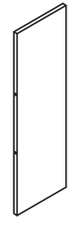
⑬ x1 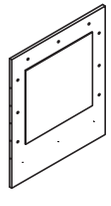	⑭ x1 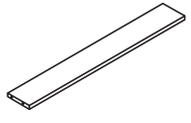	⑮ x1 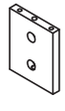

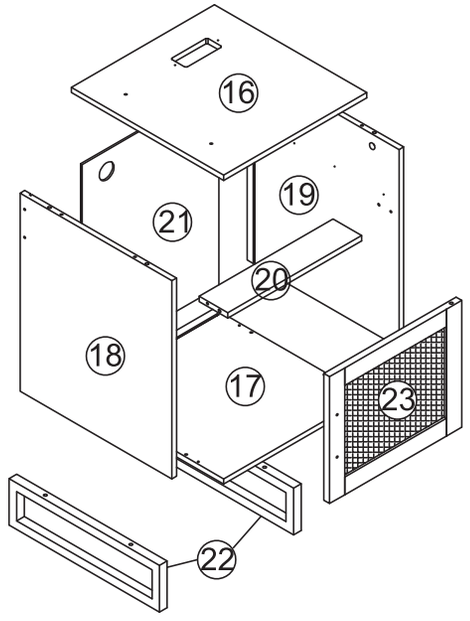

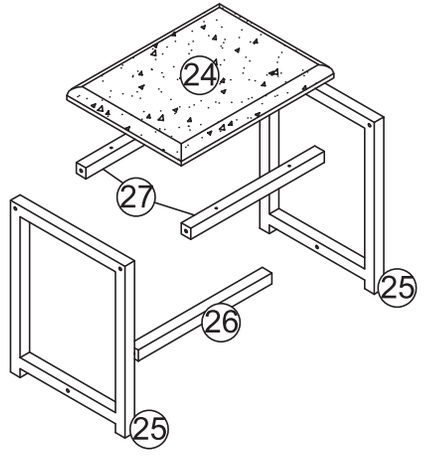

16 x1 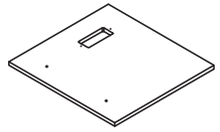	17 x1 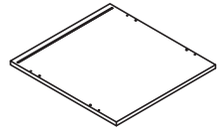	18 x1 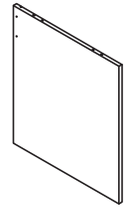
19 x1 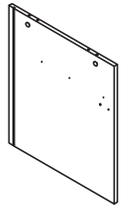	20 x1 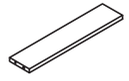	21 x1 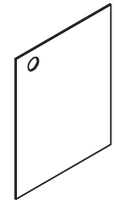
22 x2 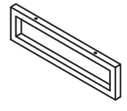	23 x1 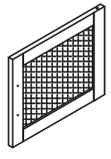	24 x1 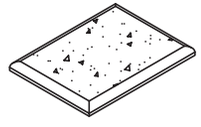
25 x2 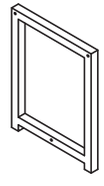	26 x1 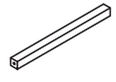	27 x2 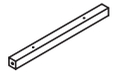

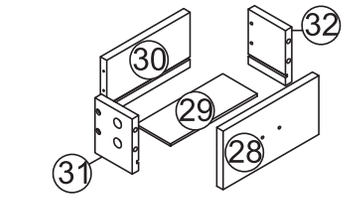

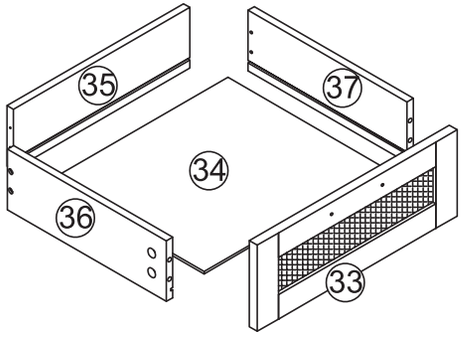

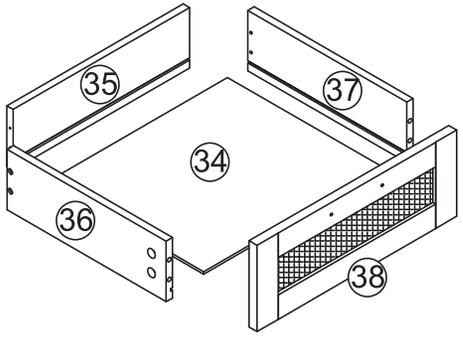

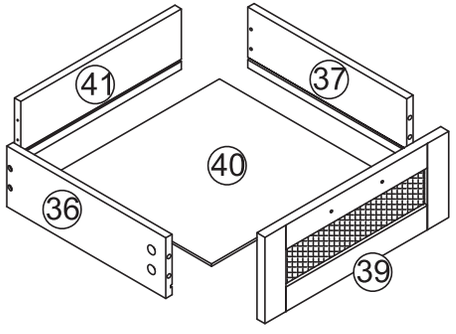

28 x1 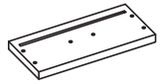	29 x1 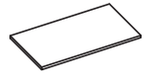	30 x1 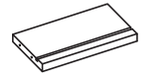
31 x1 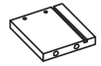	32 x1	33 x1 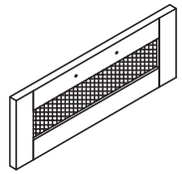
34 x2 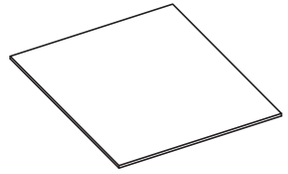	35 x2 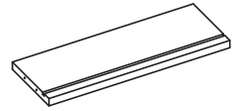	36 x3 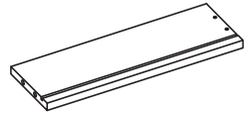
37 x3 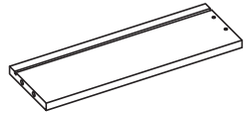	38 x1 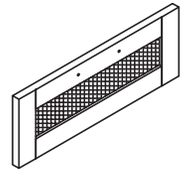	39 x1 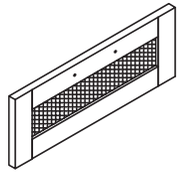
40 x1 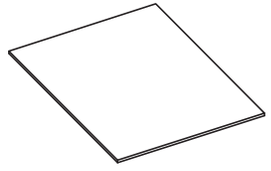	41 x1	

1

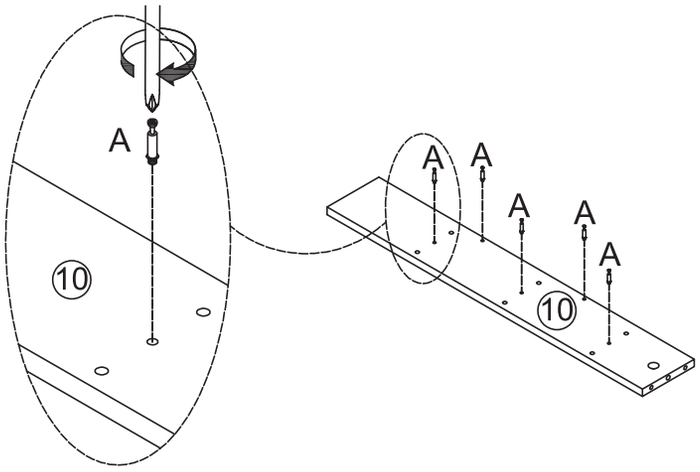

A

x 5pcs

2

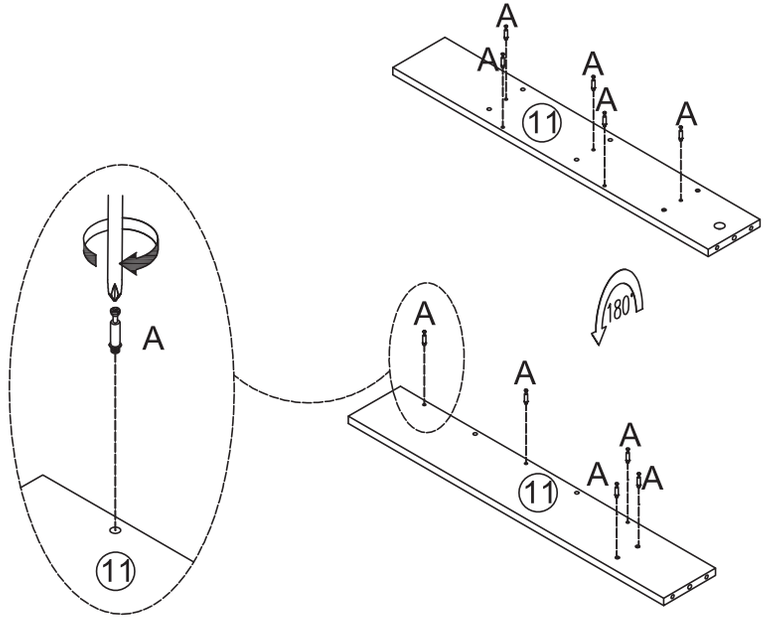

A

x10pcs

3

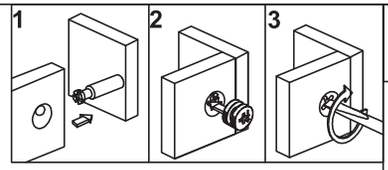
1
2
3

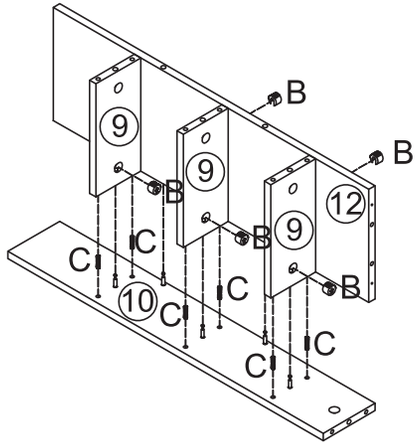
9
9
9
12
10
B
B
B
B
B
C
C
C
C
C
C

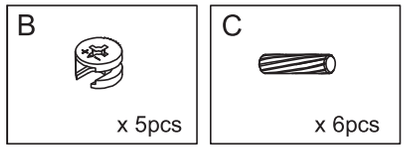
B
x 5pcs
C
x 6pcs

4

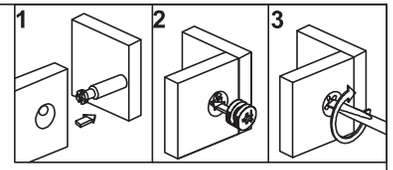
1
2
3

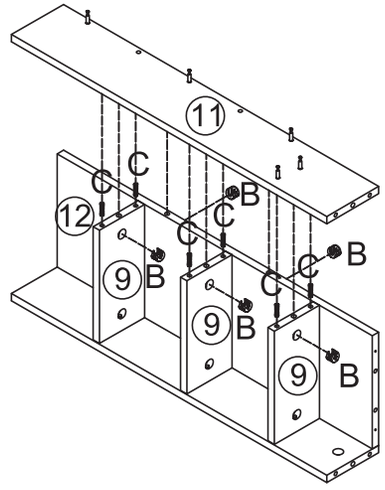
11
12
9
9
9
B
B
B
B
C
C
C
C
C
C

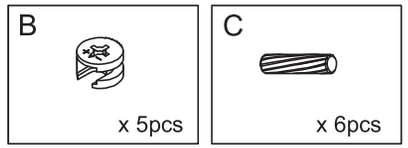
B
x 5pcs
C
x 6pcs

5

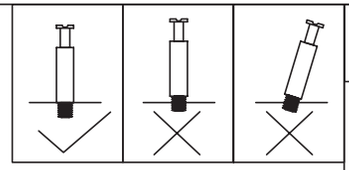

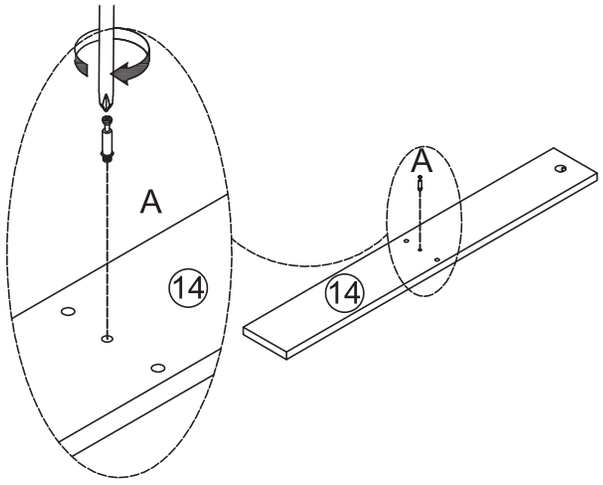

A

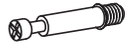

x 1pcs

6

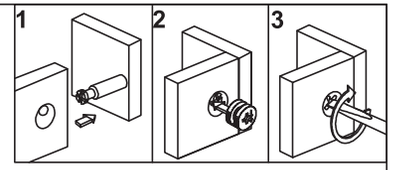

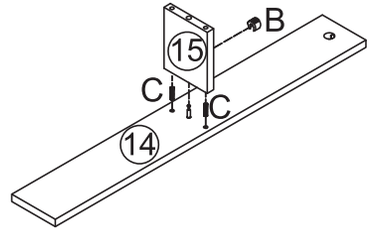

B

x 1pcs

C

x 2pcs

7

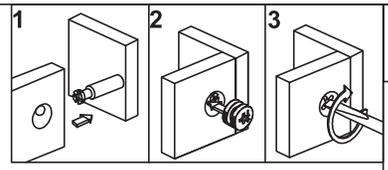

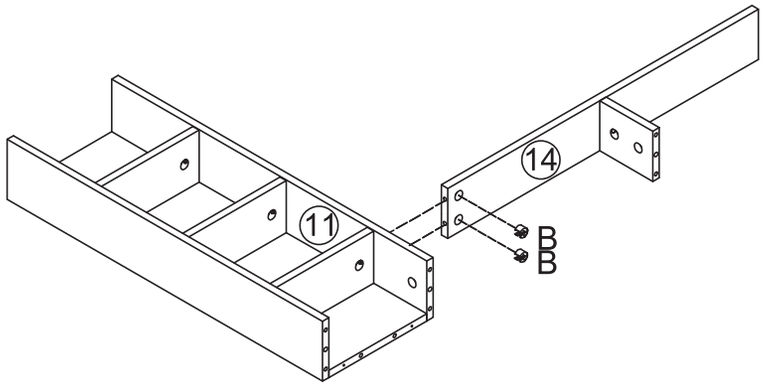

B

x 2pcs

8

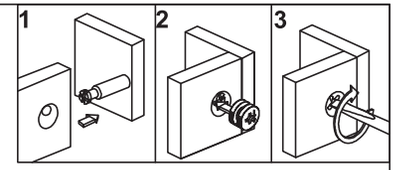

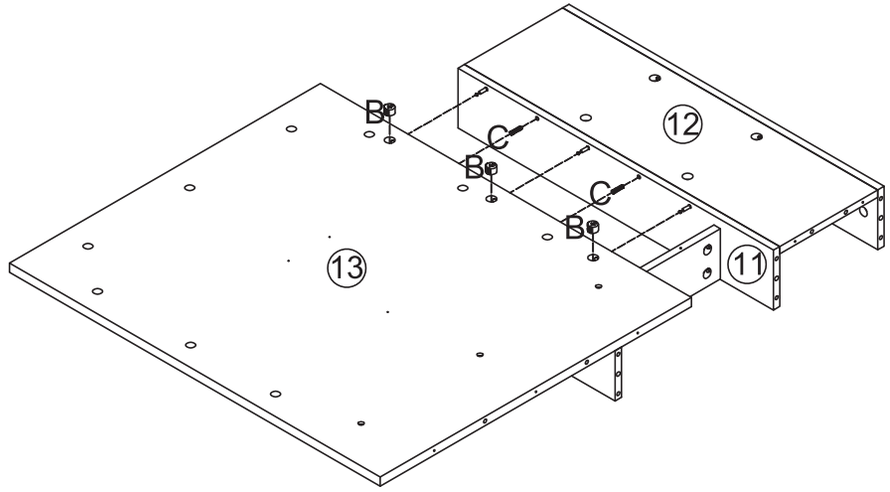

B

x 3pcs

C

x 2pcs

9

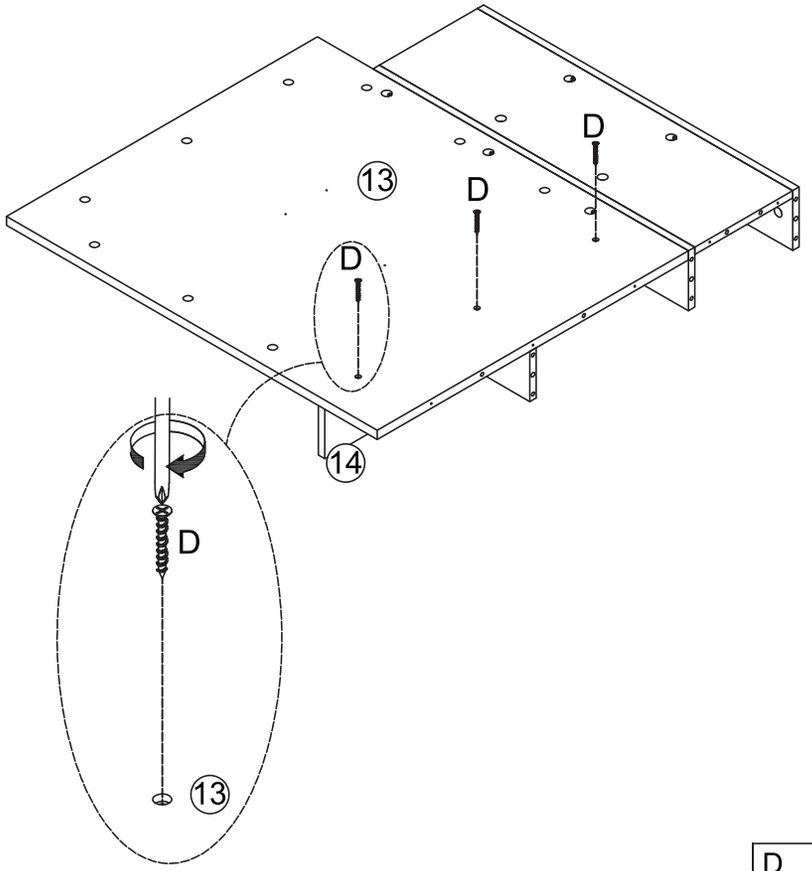

D

x 3pcs

10

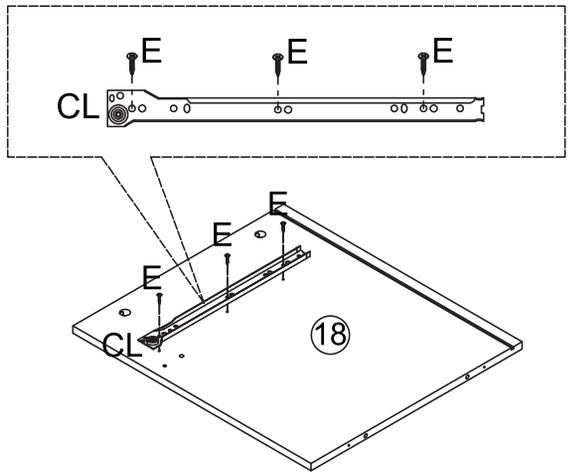

CL

x 1pcs

E

x 3pcs

11

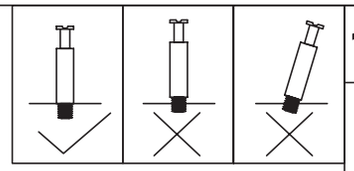

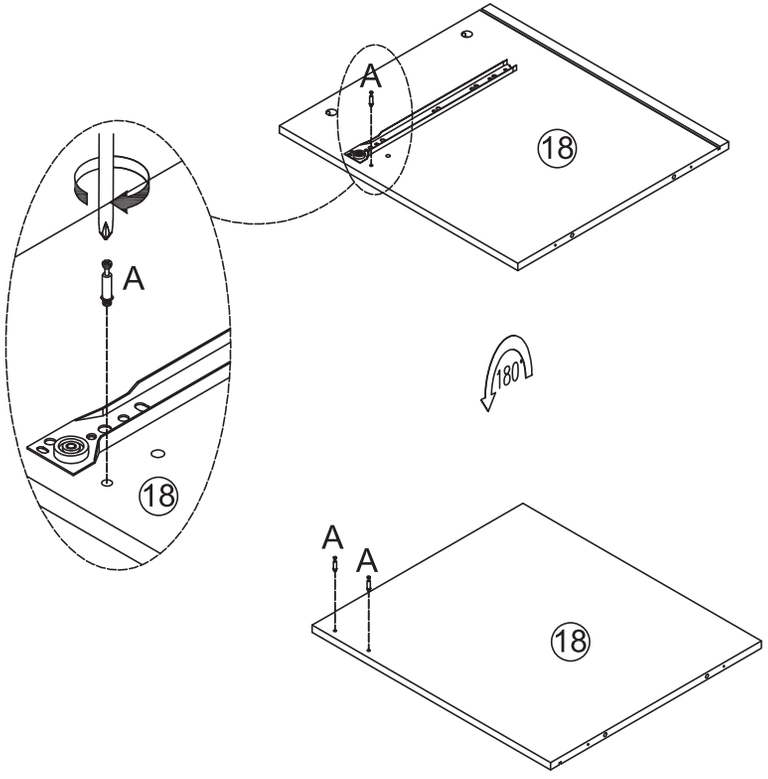

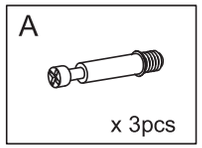

12

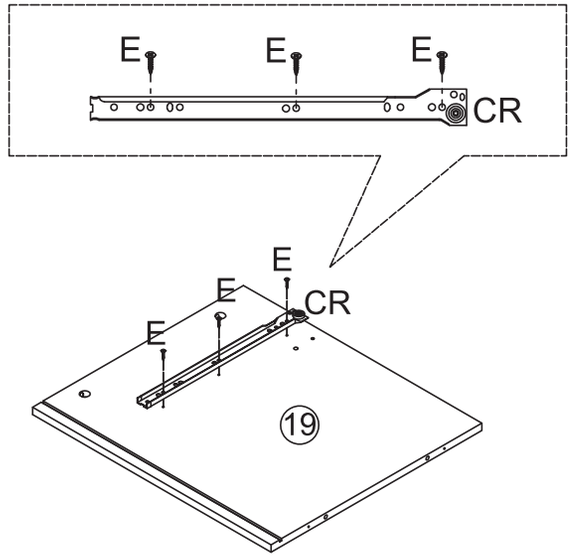

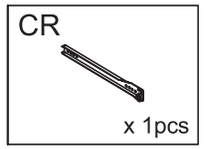

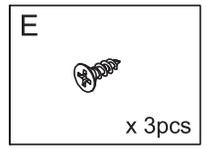

13

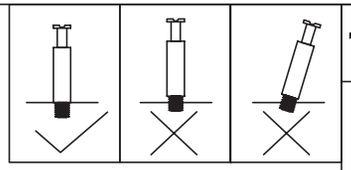

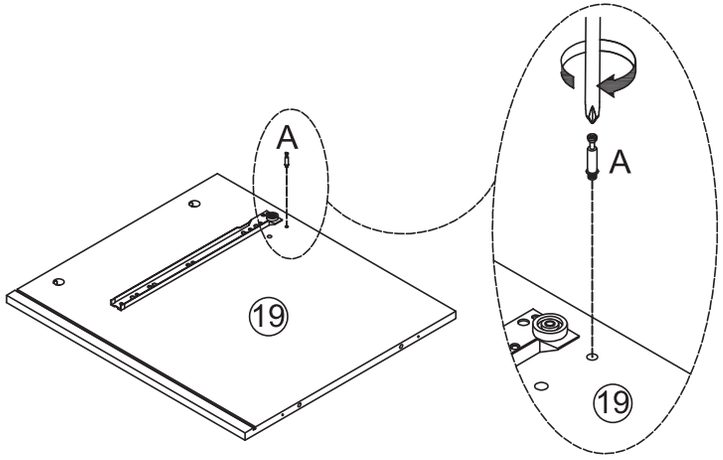

A

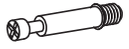

x 1pcs

14

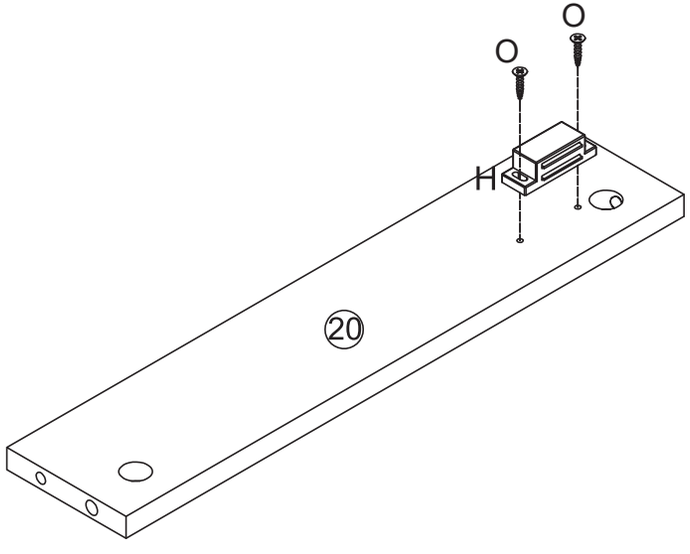

O

x 2pcs

H

x 1pcs

15

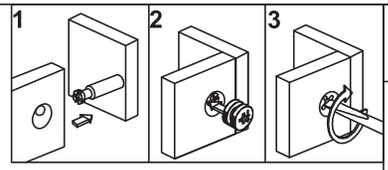

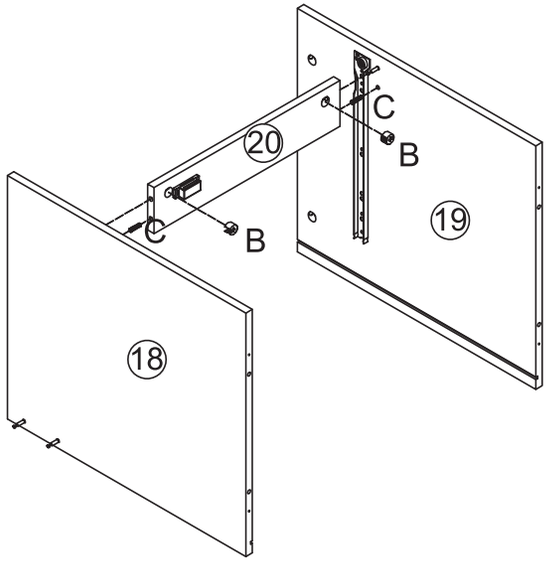

B

x 2pcs

C

x 2pcs

16

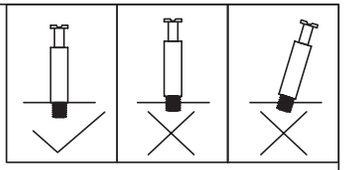

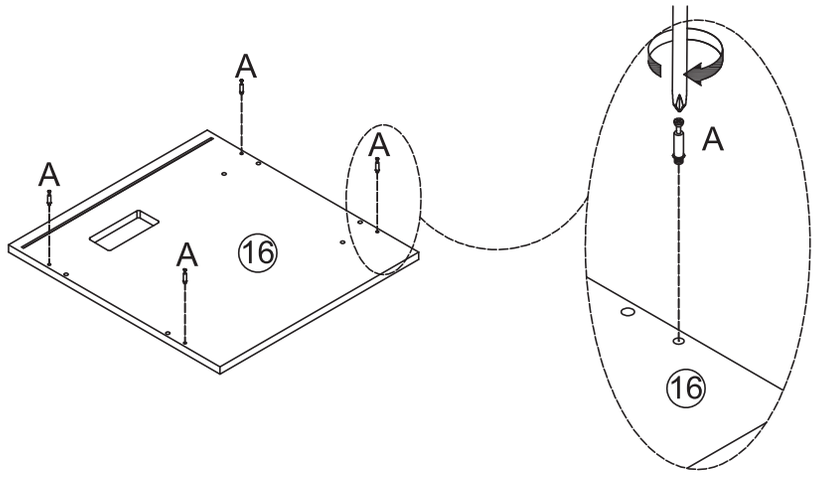

A

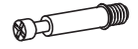

x 4pcs

17

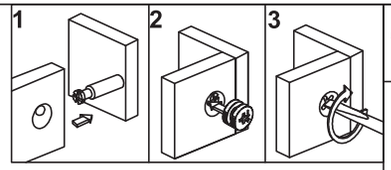

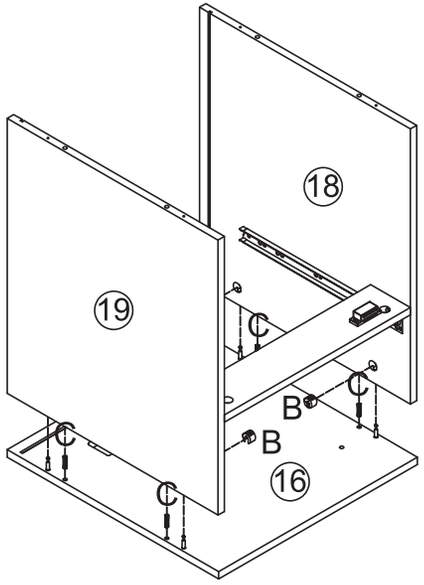

B

x 4pcs

C

x 4pcs

18

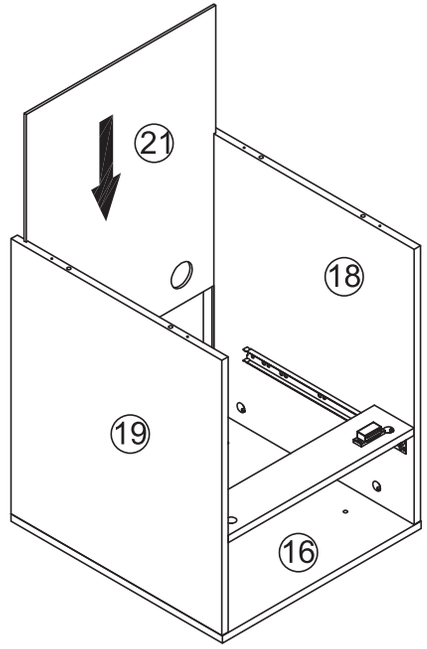

19

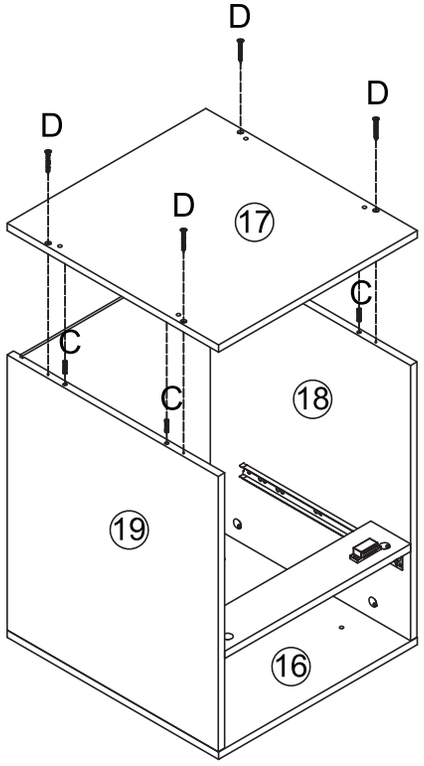

D

x 4pcs

C

x 4pcs

20

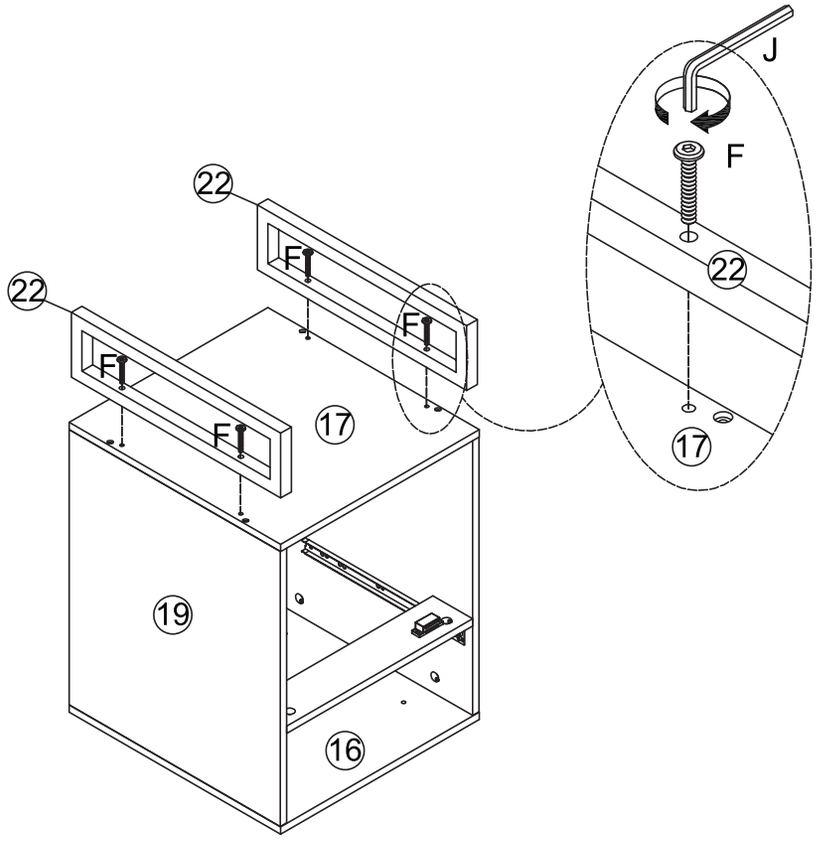

J

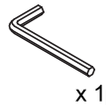

x 1pcs

F

x 4pcs

21

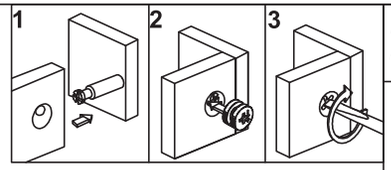

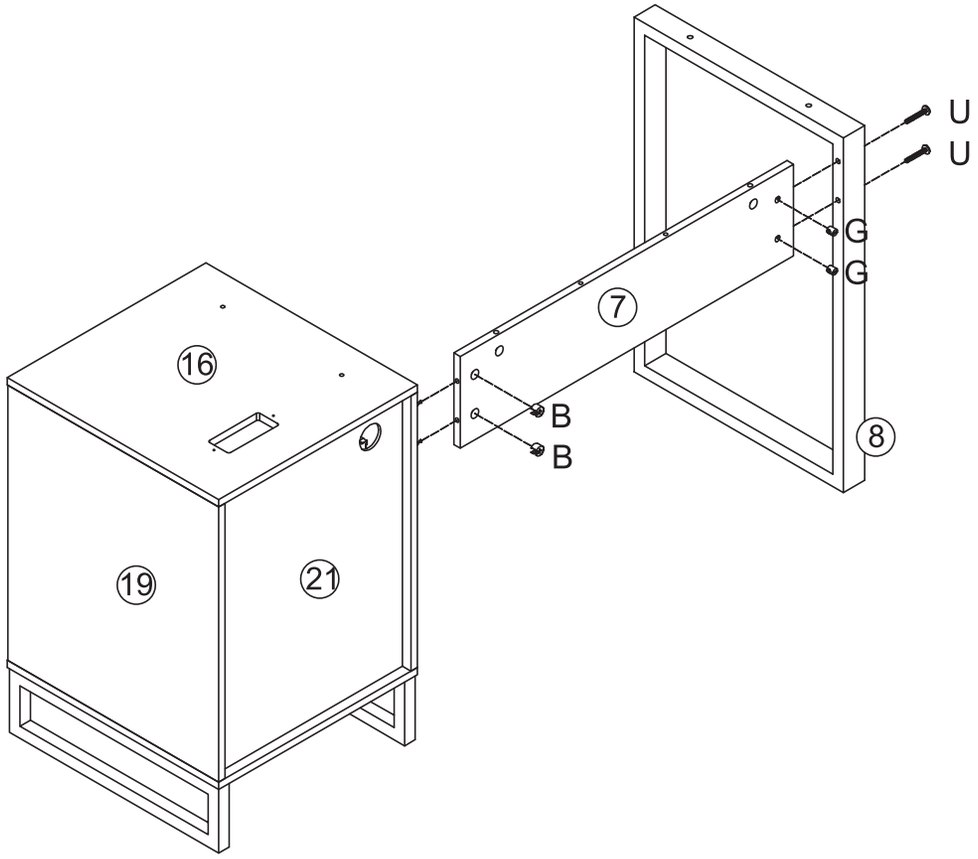

U	G	B
x 2pcs	x 2pcs	x 2pcs

22

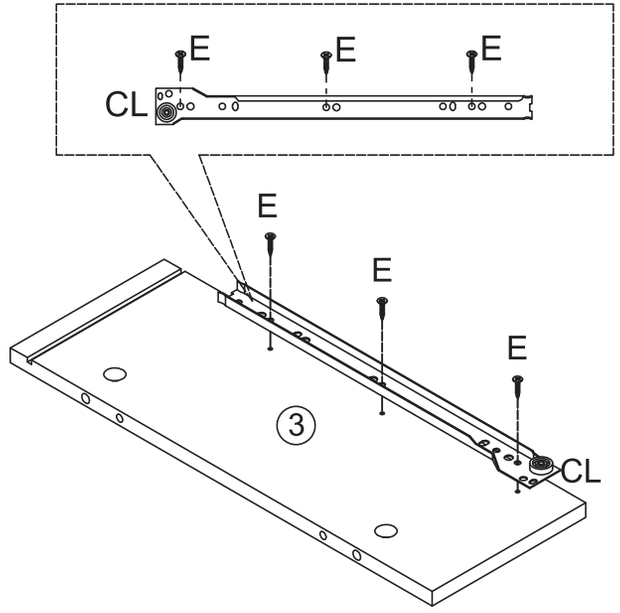

CL	E
x 1pcs	x 3pcs

23

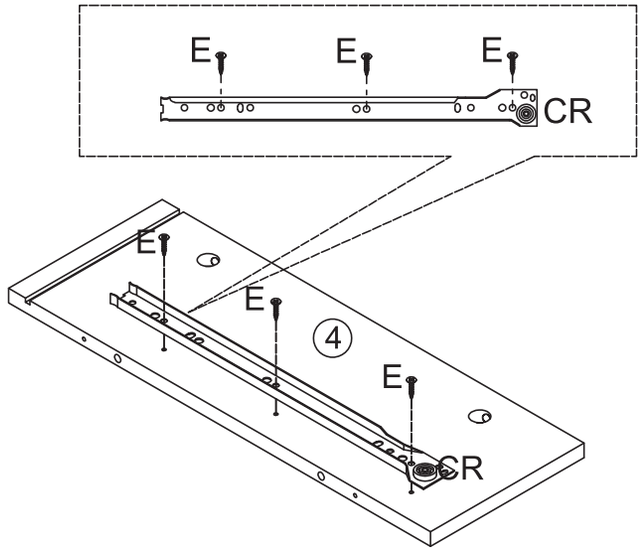

CR	E
x 1pcs	x 3pcs

24

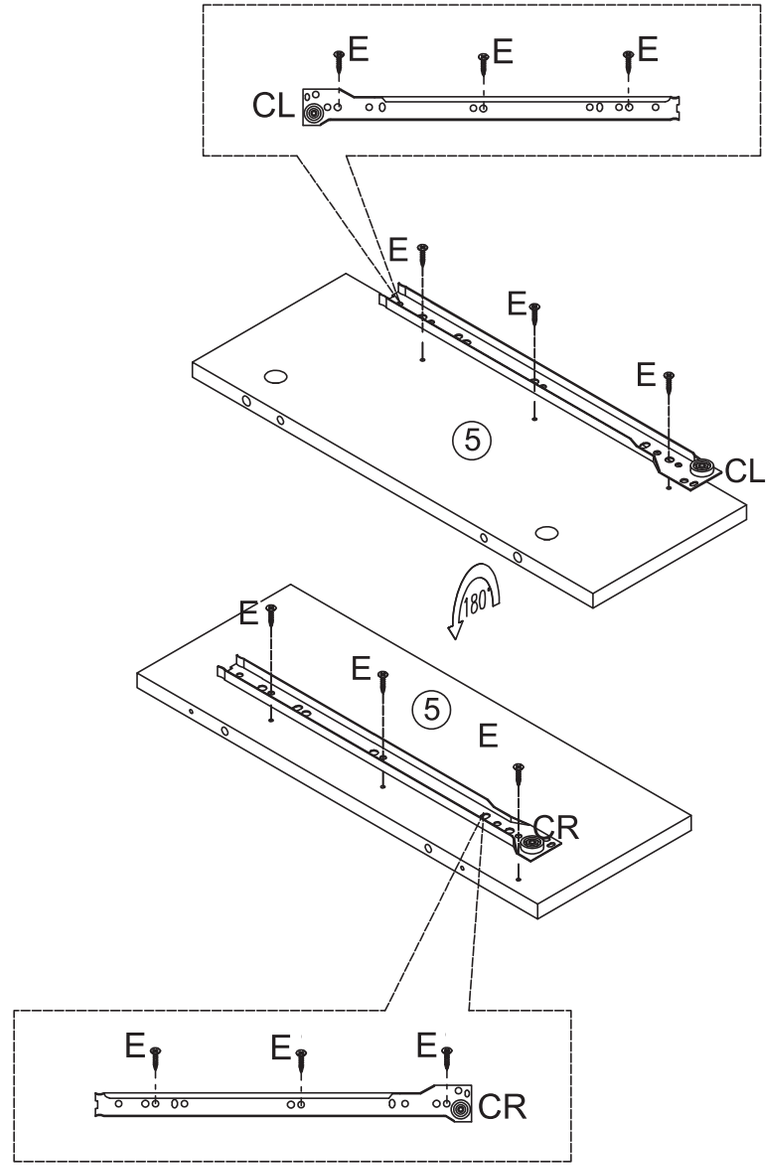

CR	CL	E
x 1pcs	x 1pcs	x 6pcs

25

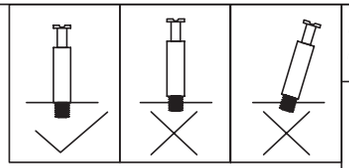

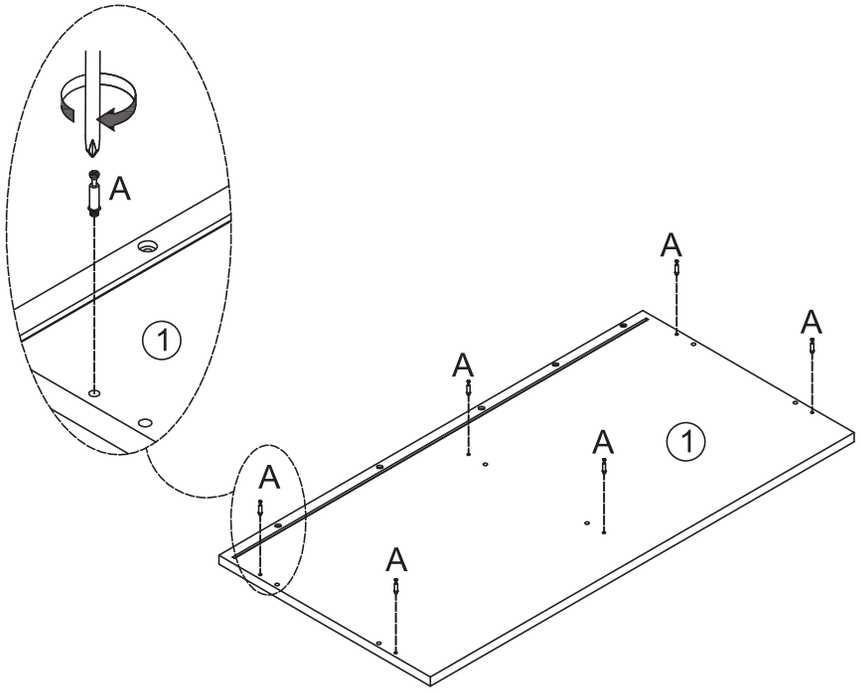

A

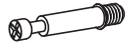

x 6pcs

26

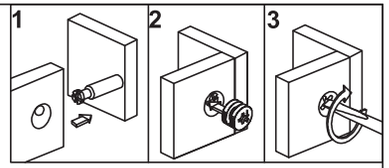

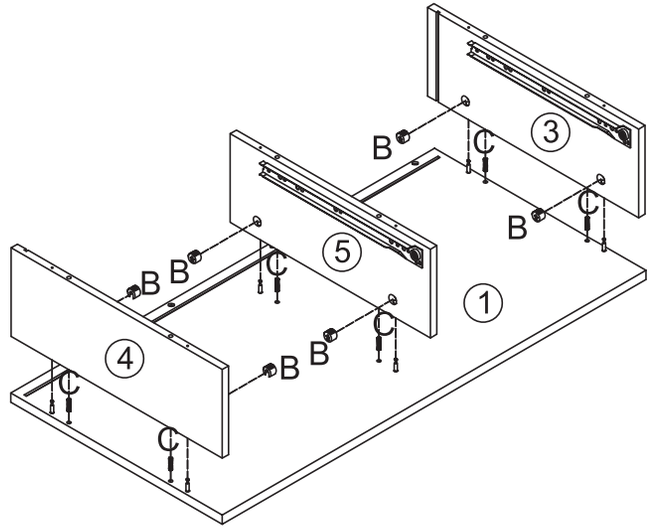

B

x 6pcs

C

x 6pcs

27

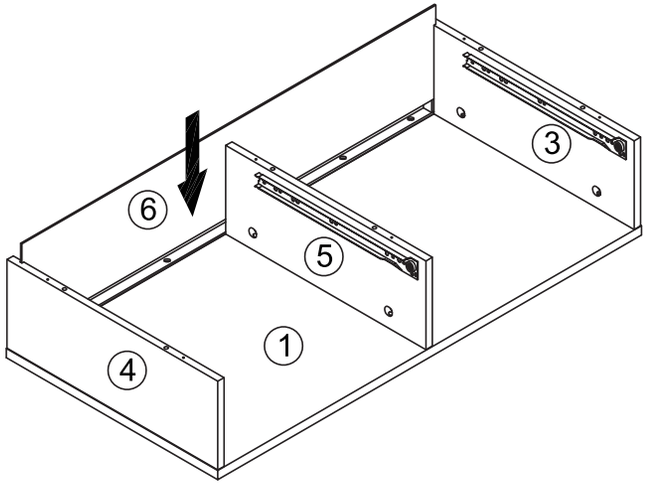

28

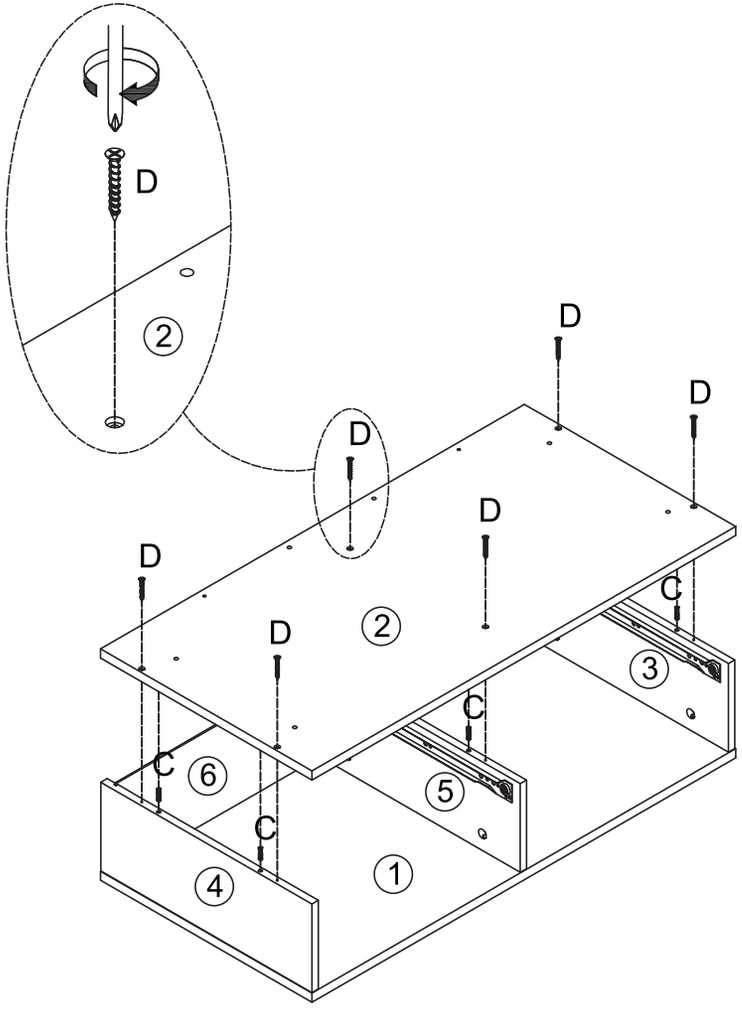

D	C
x 6pcs	x 6pcs

29

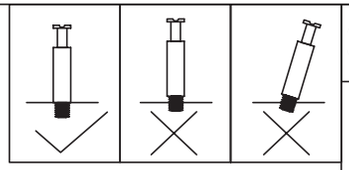

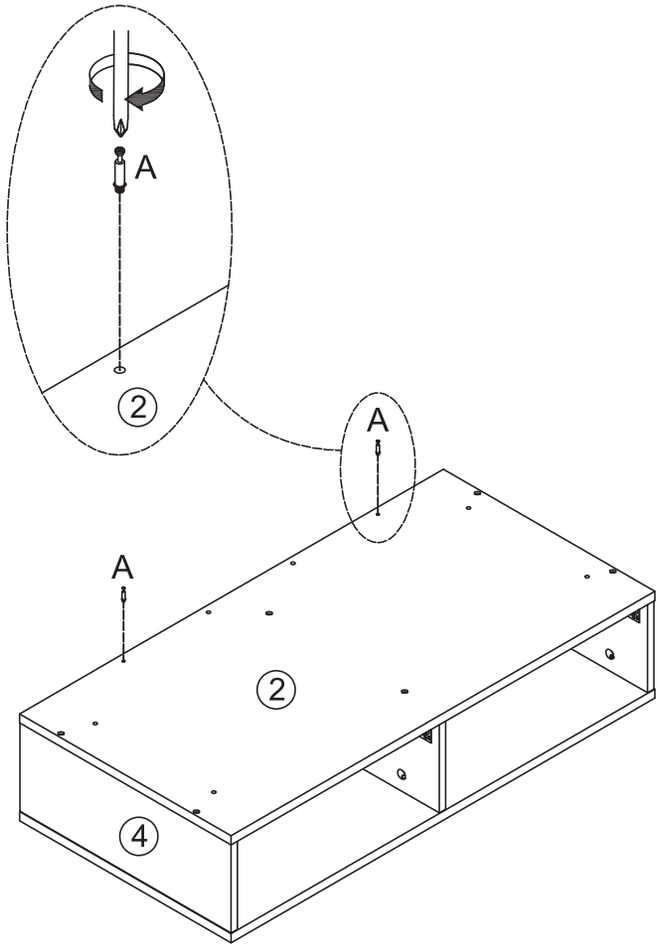

30

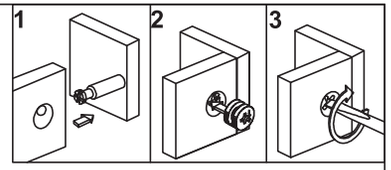

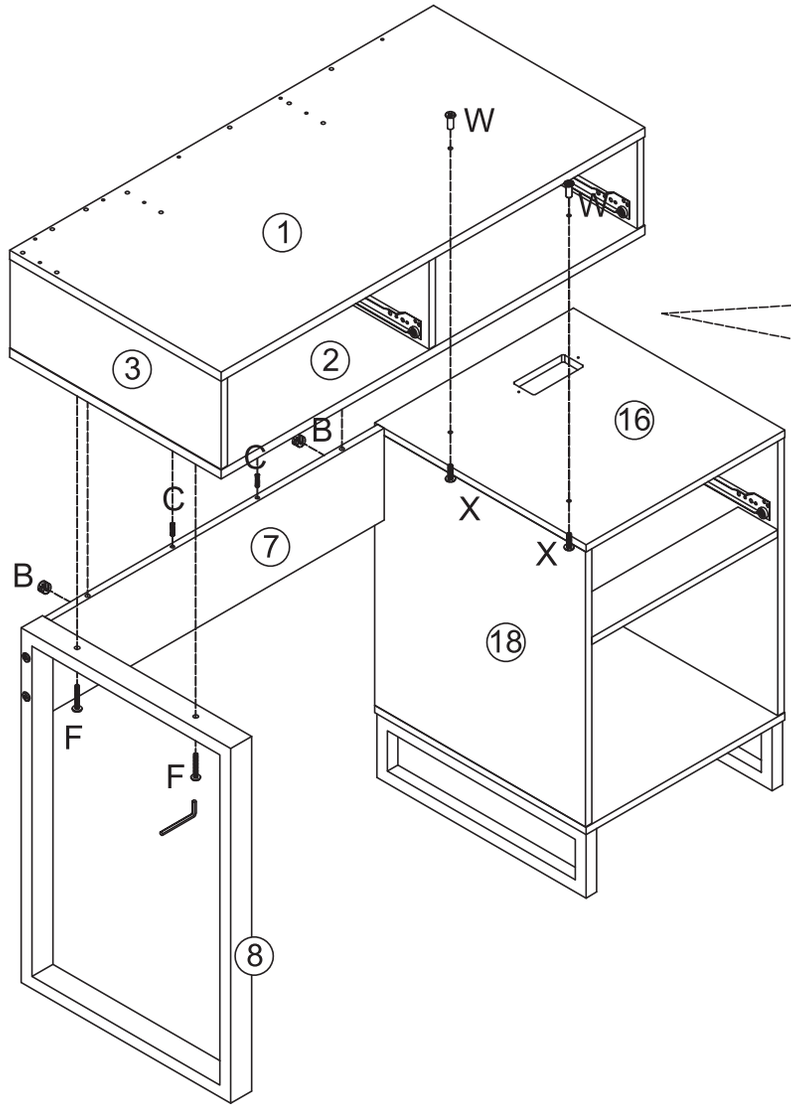

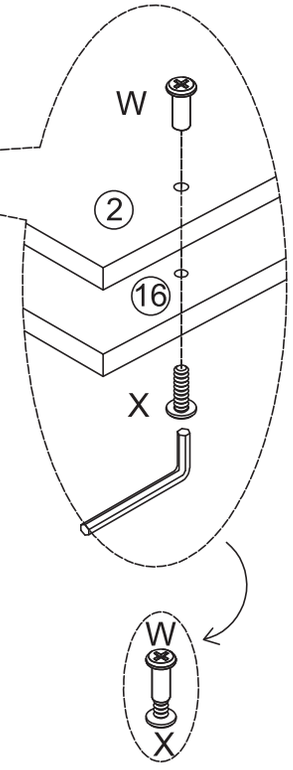

A	W	X	F	B	C
x 2pcs	x 2pcs	x 2pcs	x 2pcs	x 2pcs	x 2pcs

31

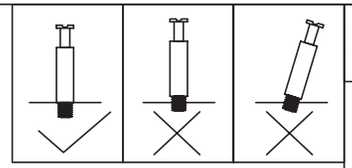

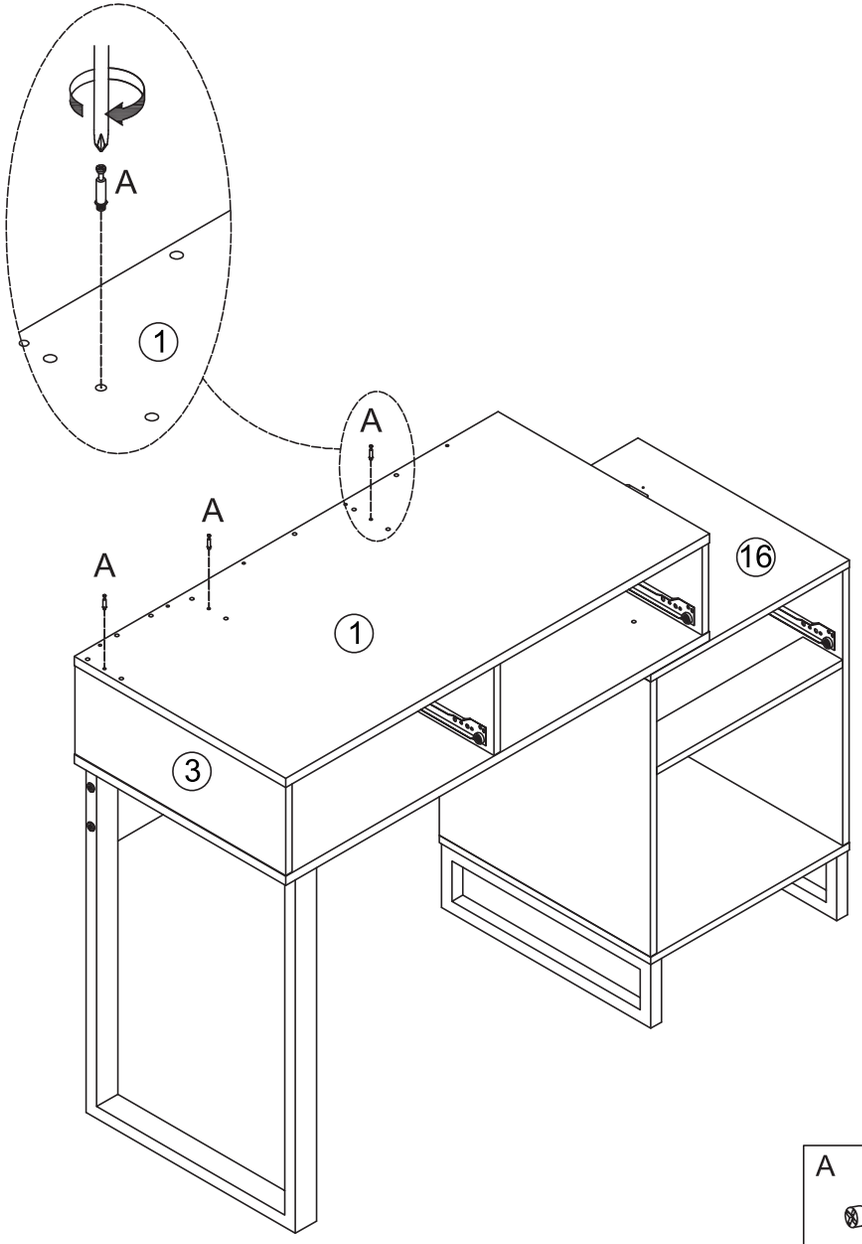
A
1
A
A
A
16
1
3

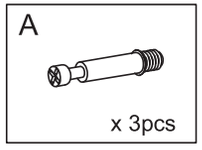
A
x 3pcs

32

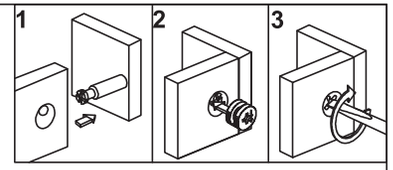
1
2
3

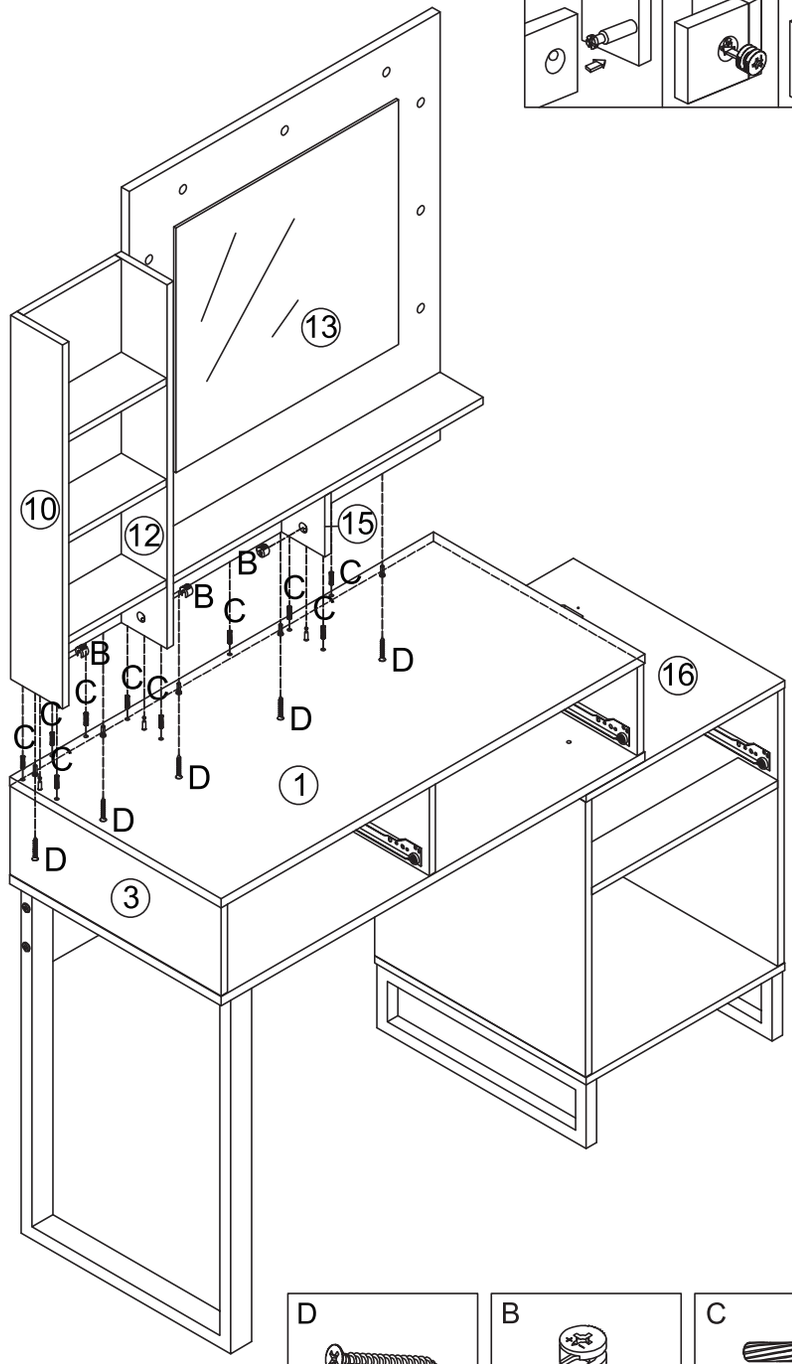
13
10
12
15
16
1
3
B
C
D

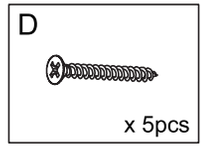
D
x 5pcs

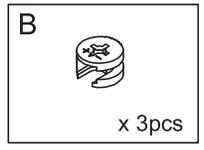
B
x 3pcs

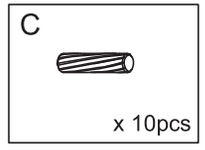
C
x 10pcs

33

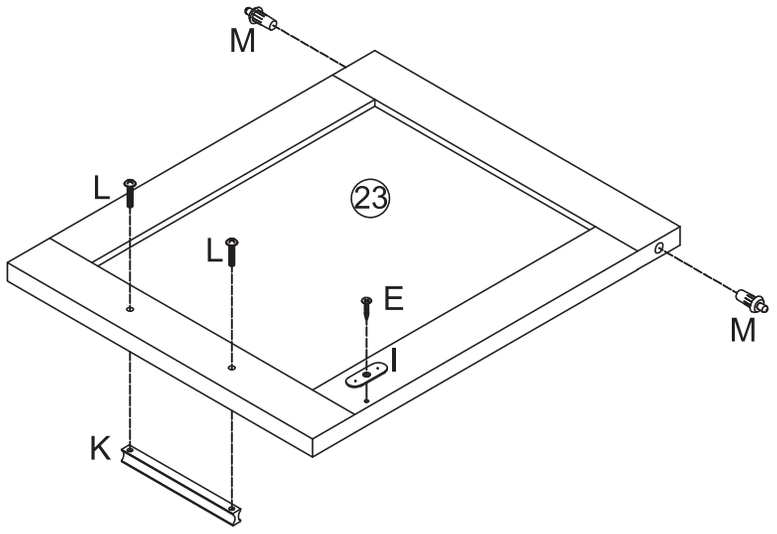

M	L	K	I	E
x 2pcs	x 2pcs	x 1pcs	x 1pcs	x 1pcs

34

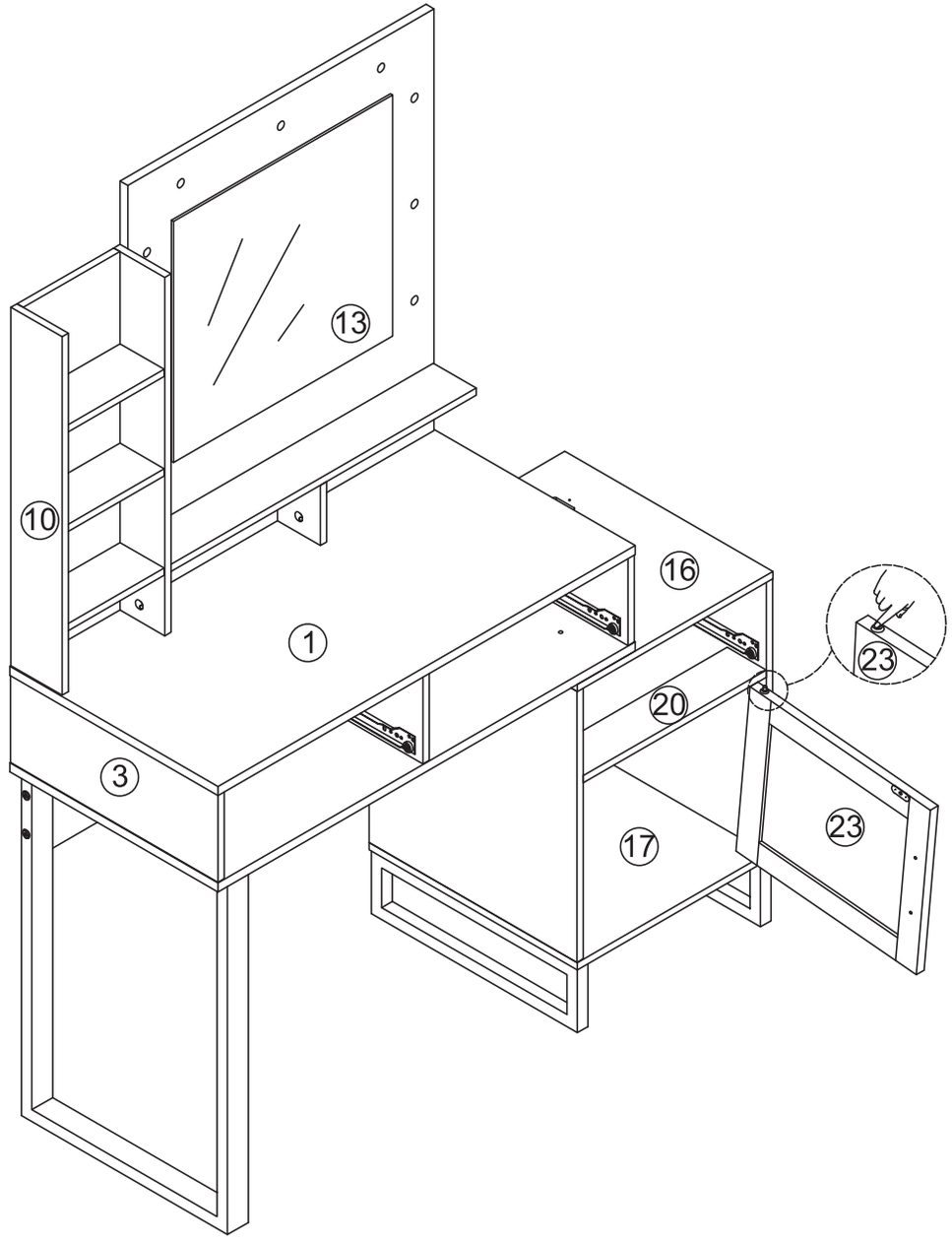

35

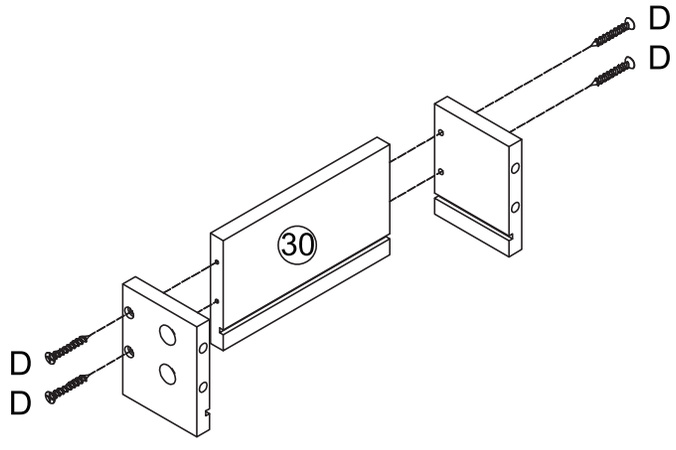

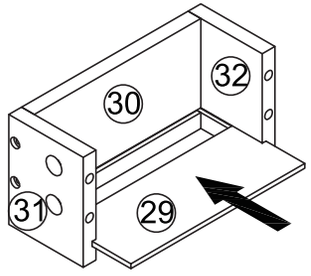

D

x 4pcs

36

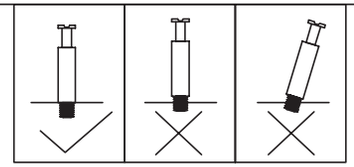

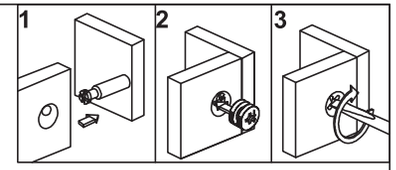

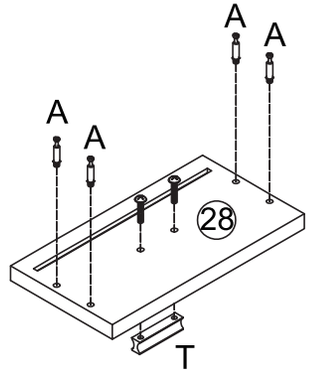

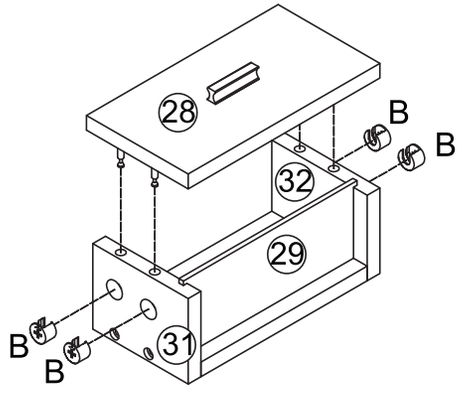

T

x 1pc

B

x 4pcs

A

x 4pcs

37

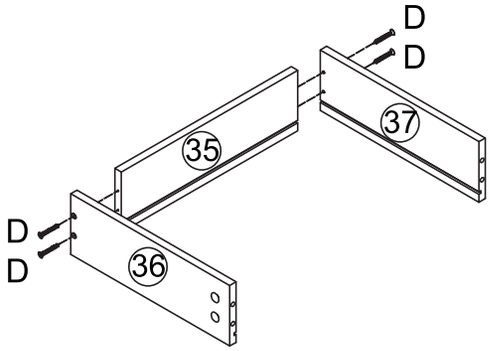

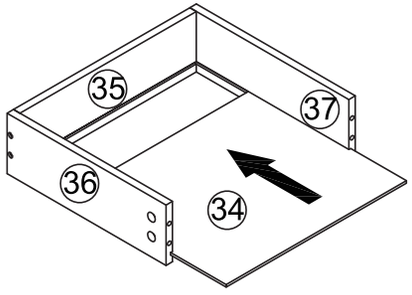

X2

D

x 8pcs

38

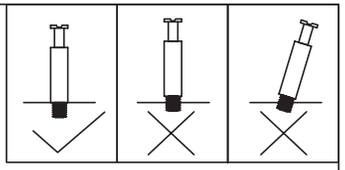

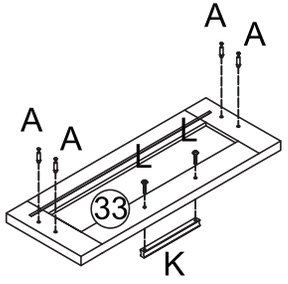

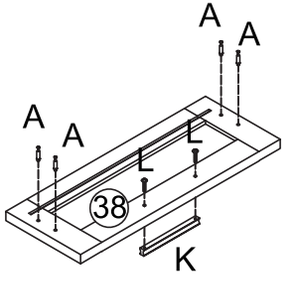

L

x 4pcs

K

x 2pcs

A

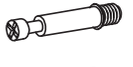

x 8pcs

39

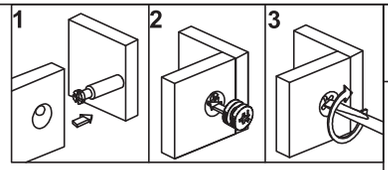

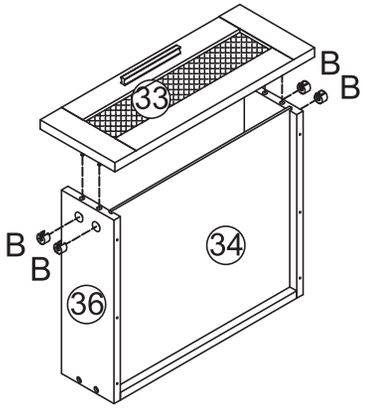

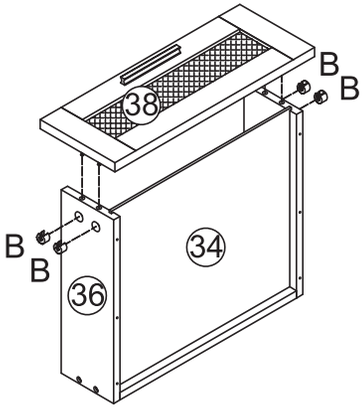

B

x 8pcs

40

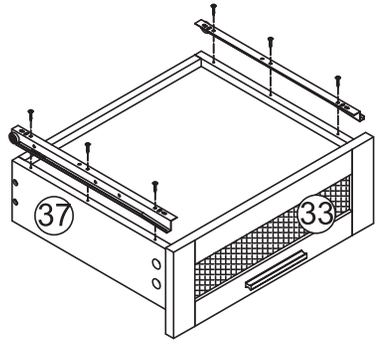

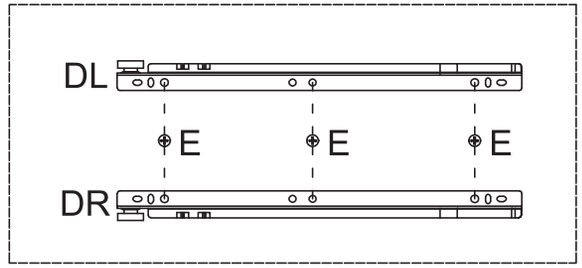

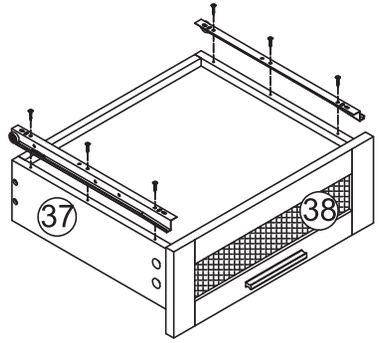

DL

x 2pcs

DR

x 2pcs

E

x 12pcs

41

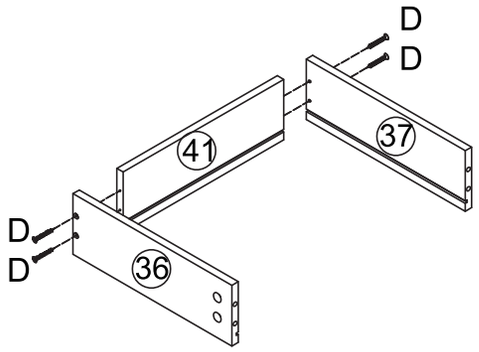

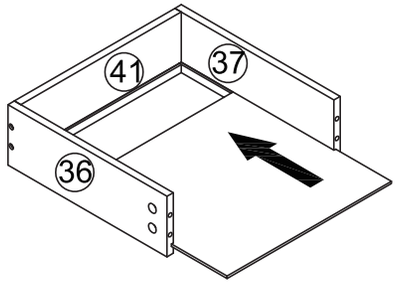

D

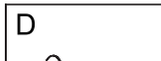

x 4pcs

42

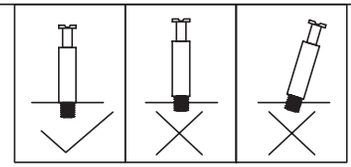

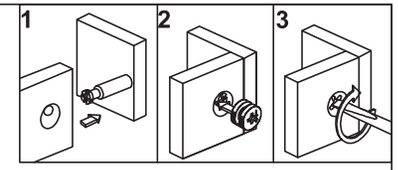

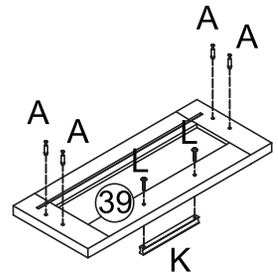

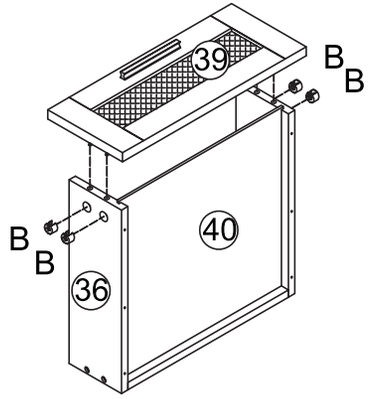

L

x 2pcs

K

x 1pcs

B

x 4pcs

A

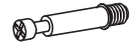

x 4pcs

43

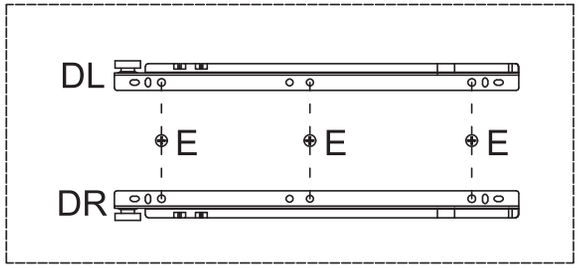

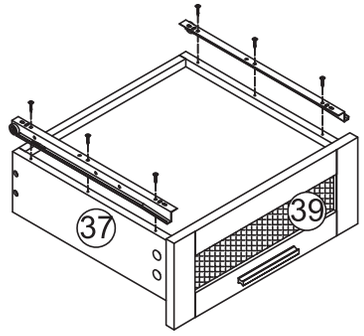

DL	DR	E
x 1pcs	x 1pcs	x 6pcs

44

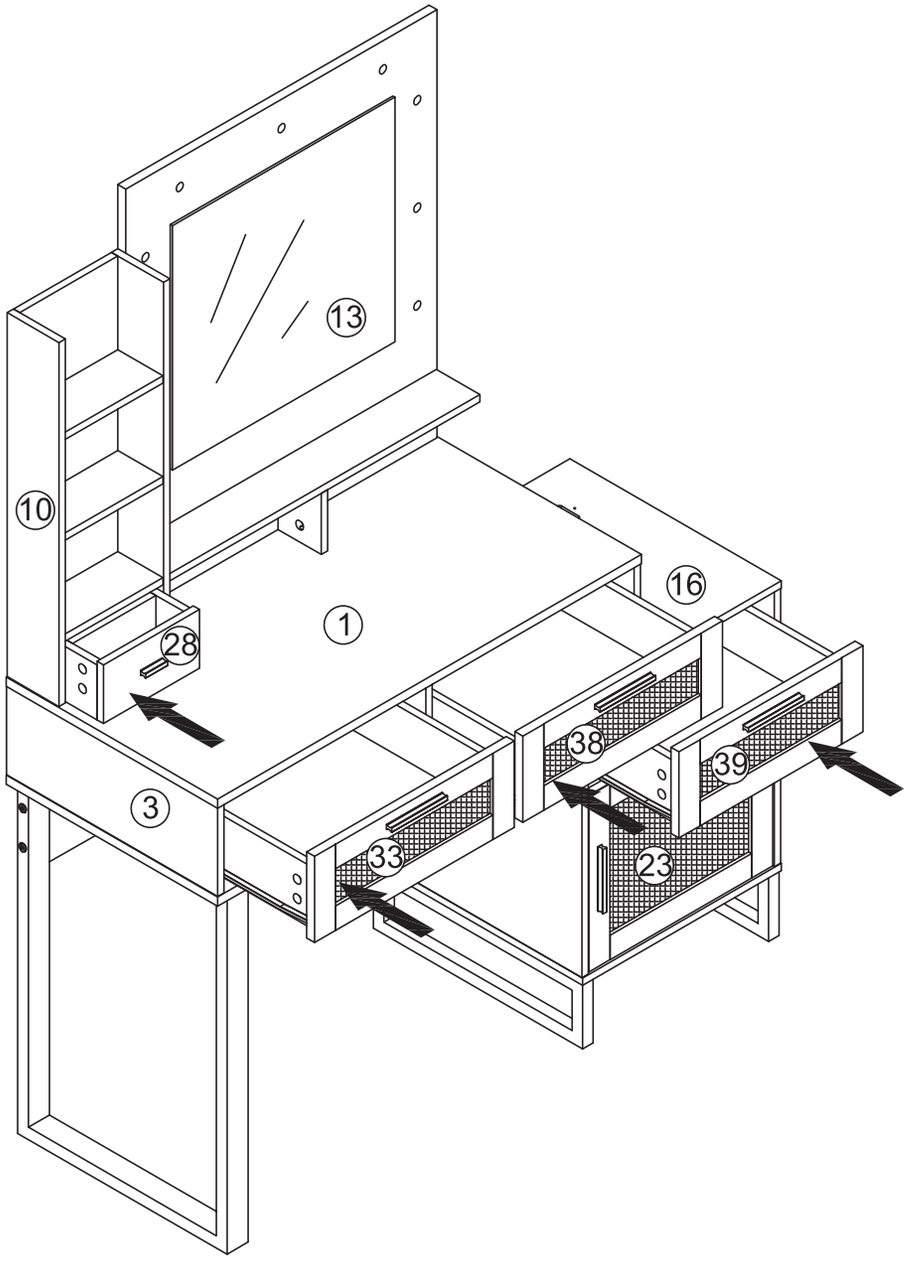

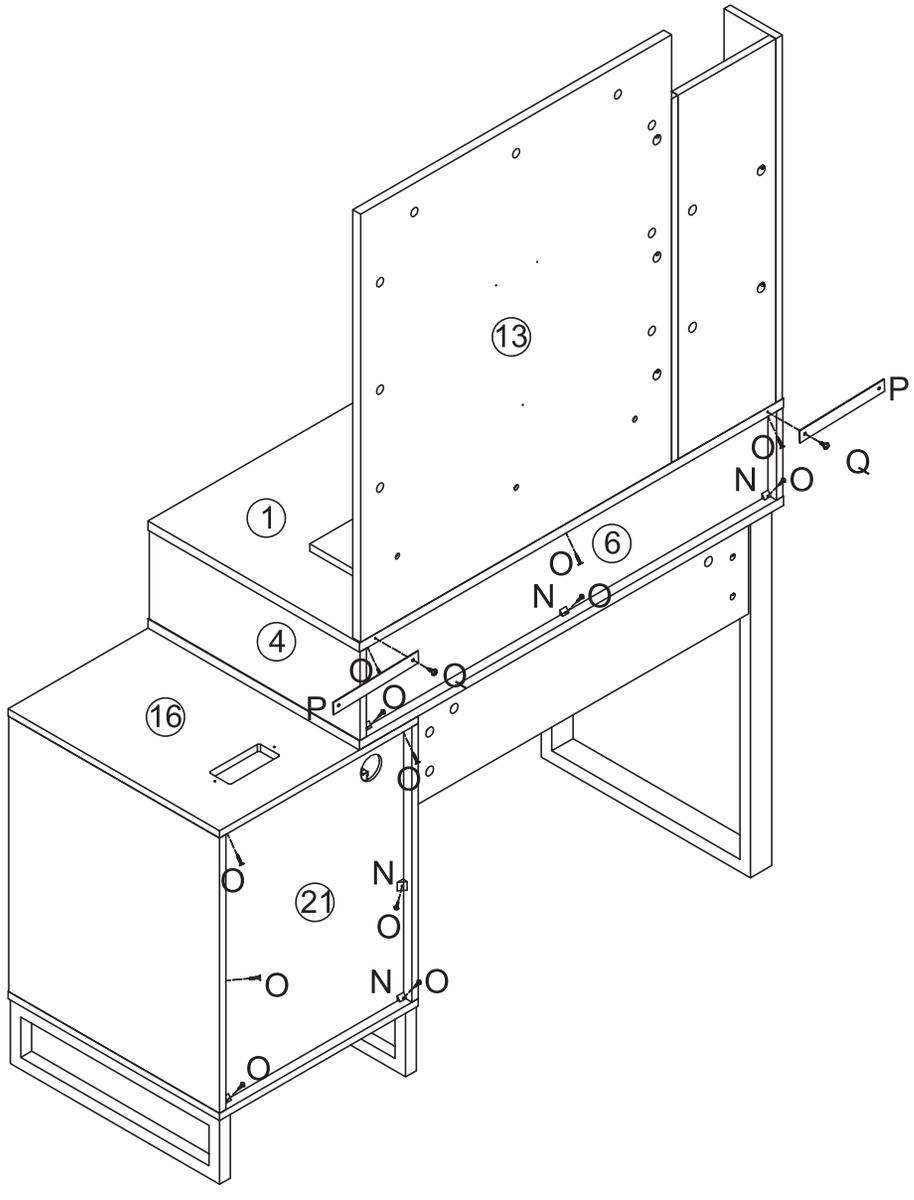

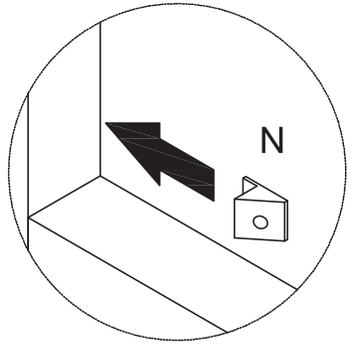

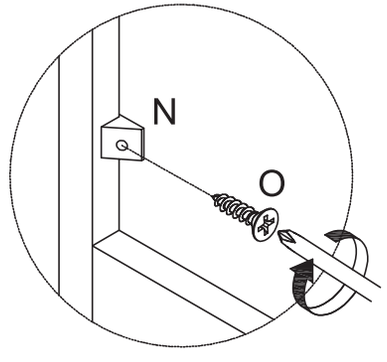

P	Q	N	O
x 2pcs	x 2pcs	x 12pcs	x 12pcs

46

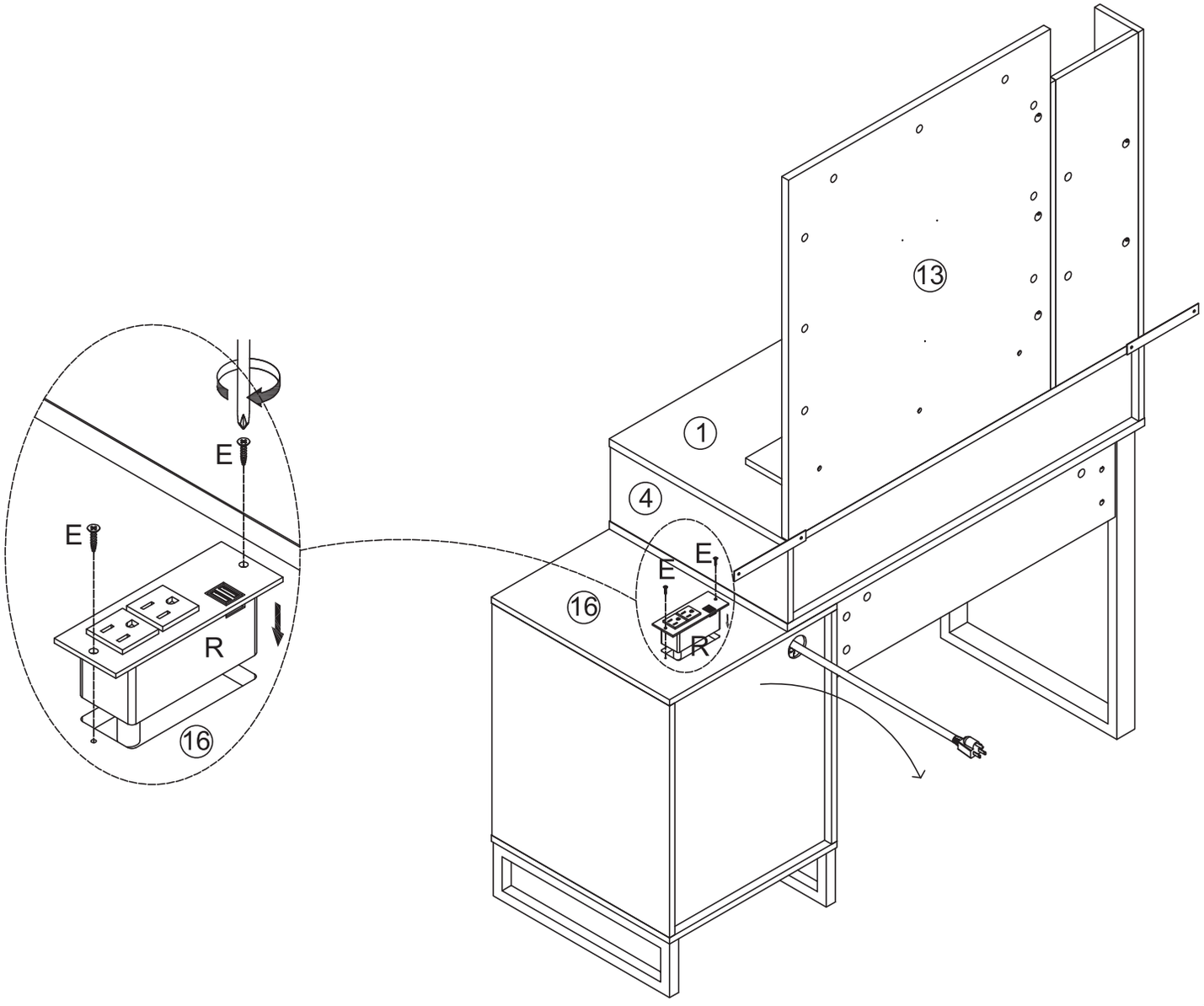

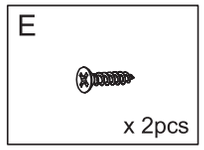

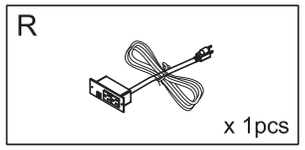

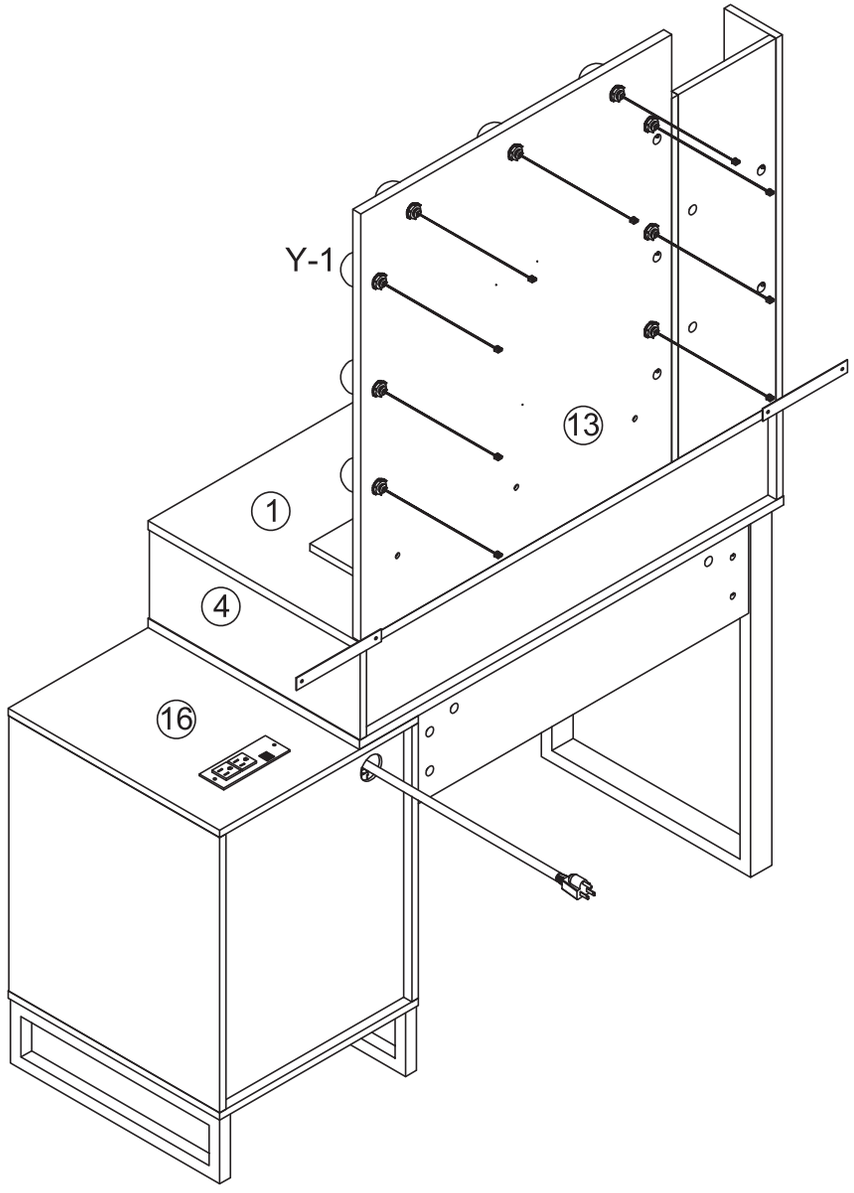

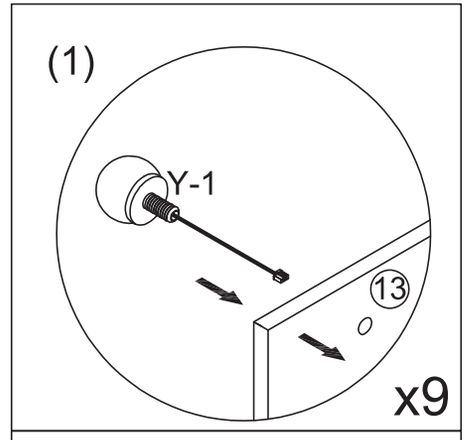

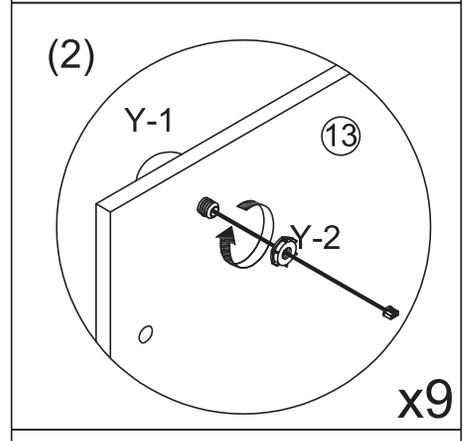

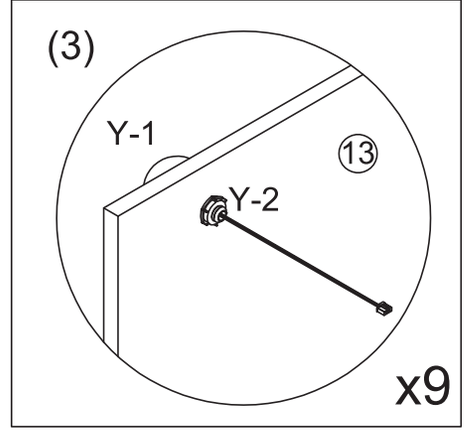

Y

Y-1 x9 **Y-2** x9

x 1pcs

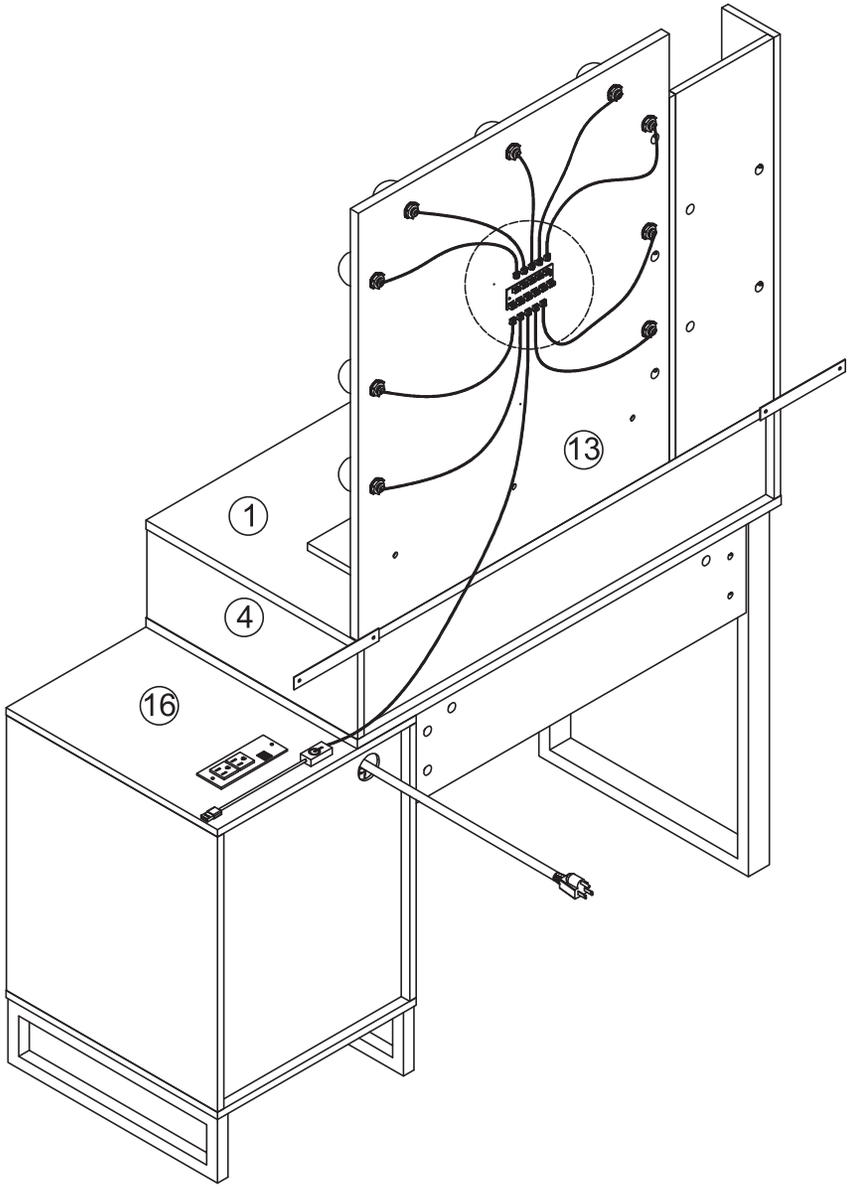

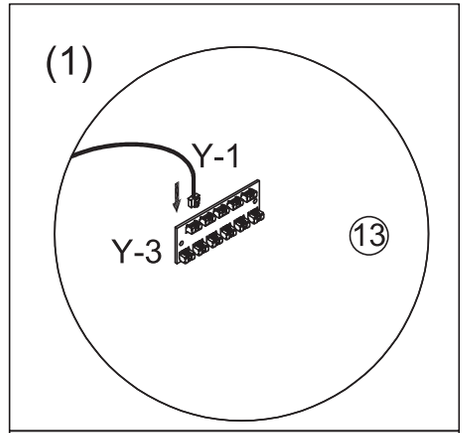

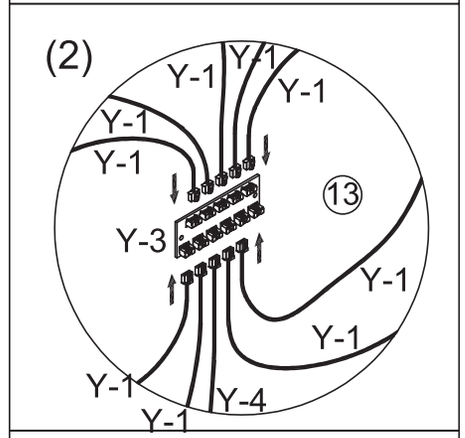

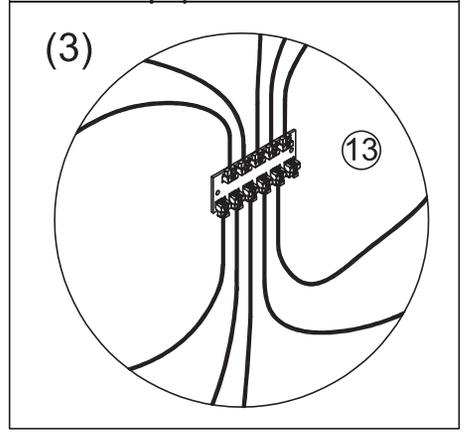

Q

x 2pcs

Y

Y-3

Y-4

x 1pcs

49

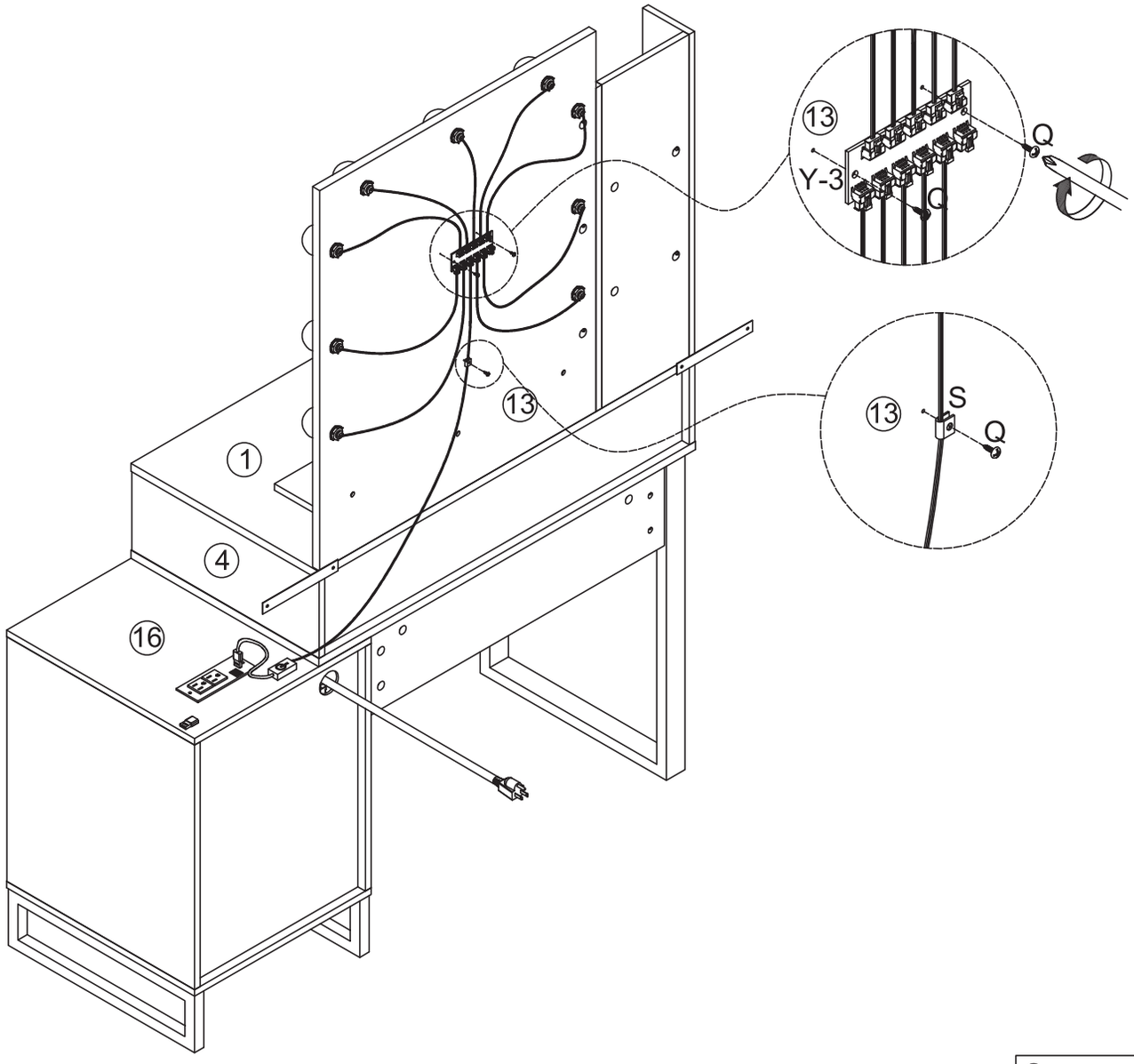

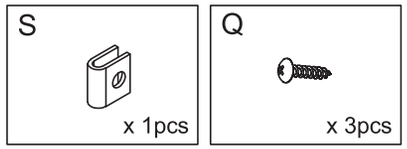

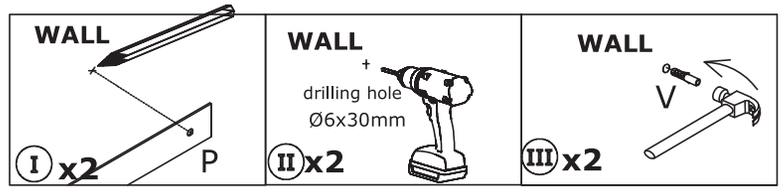
WALL
P
I x2
WALL
drilling hole
Ø6x30mm
II x2
WALL
V
III x2

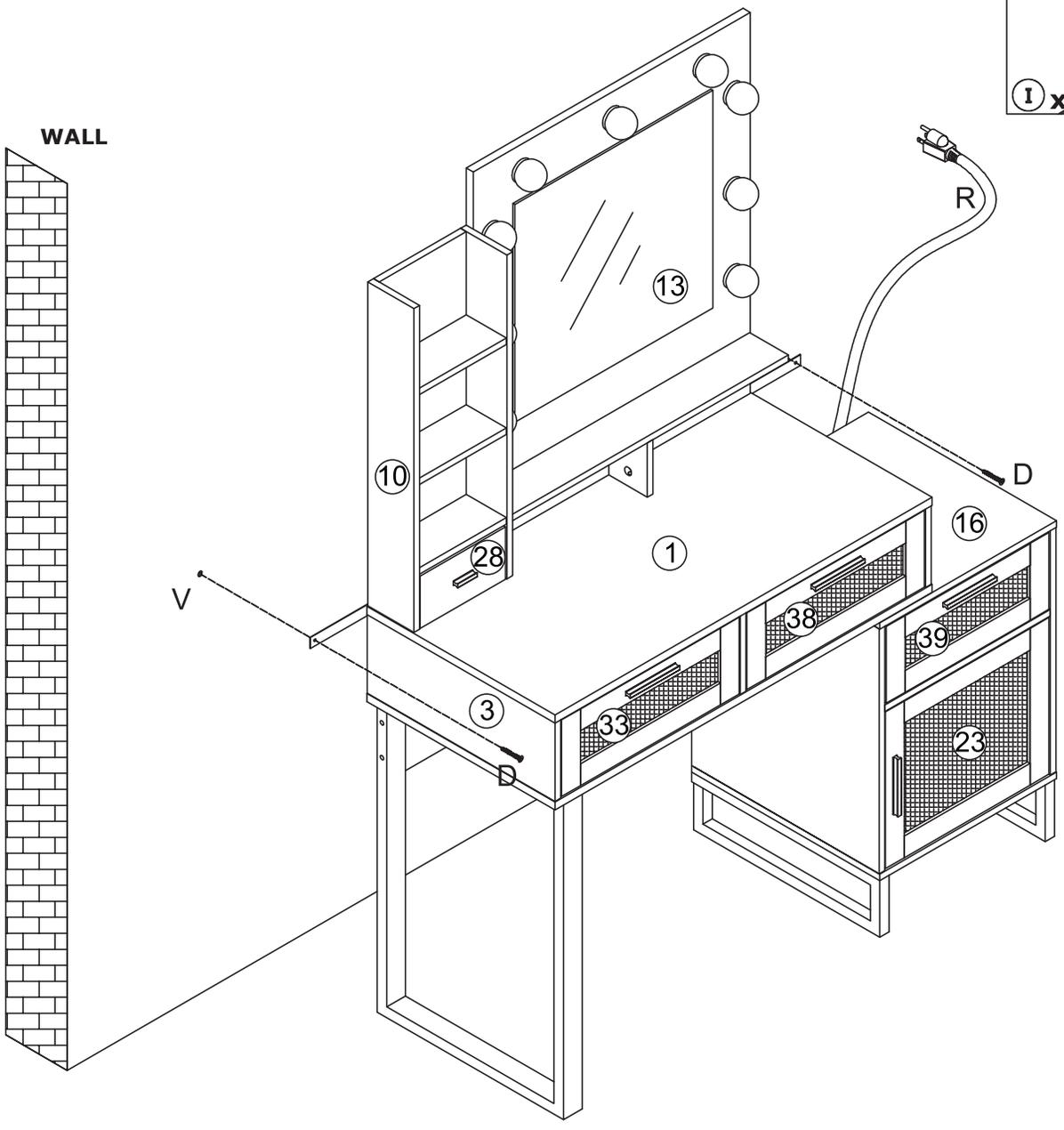
WALL
R
13
10
D
16
28
1
V
38
39
3
33
23
D

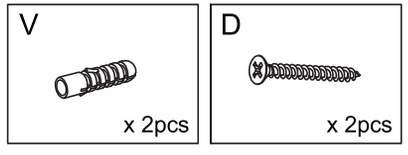
V
x 2pcs
D
x 2pcs

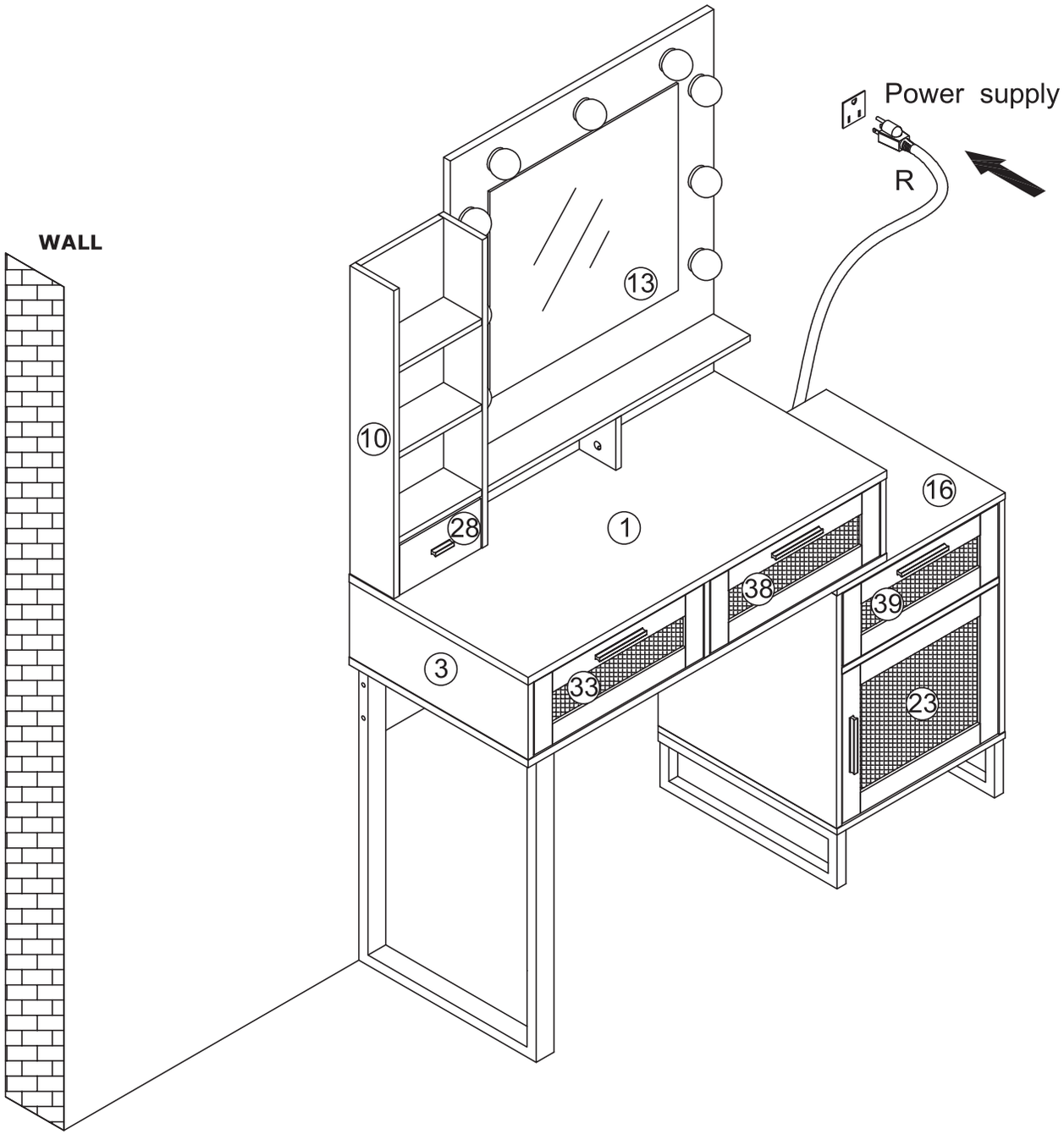
WALL
Power supply
R
13
10
28
1
16
38
39
3
33
23

52

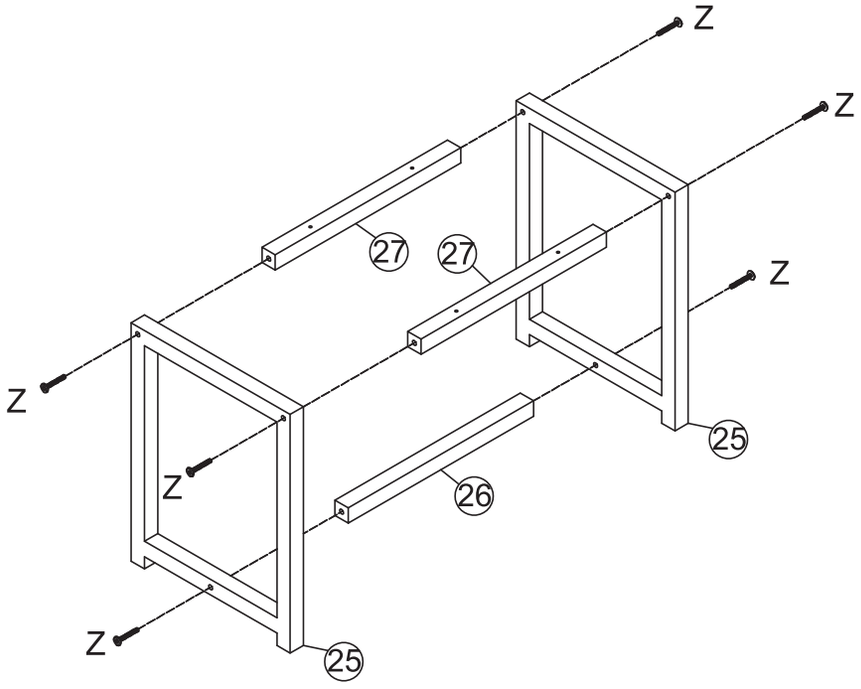

Z

x 6pcs

53

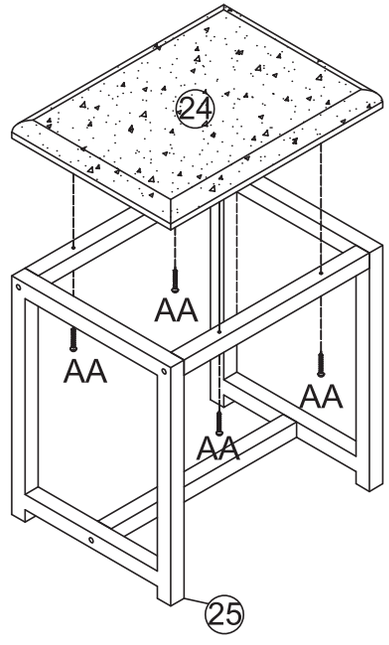

AA
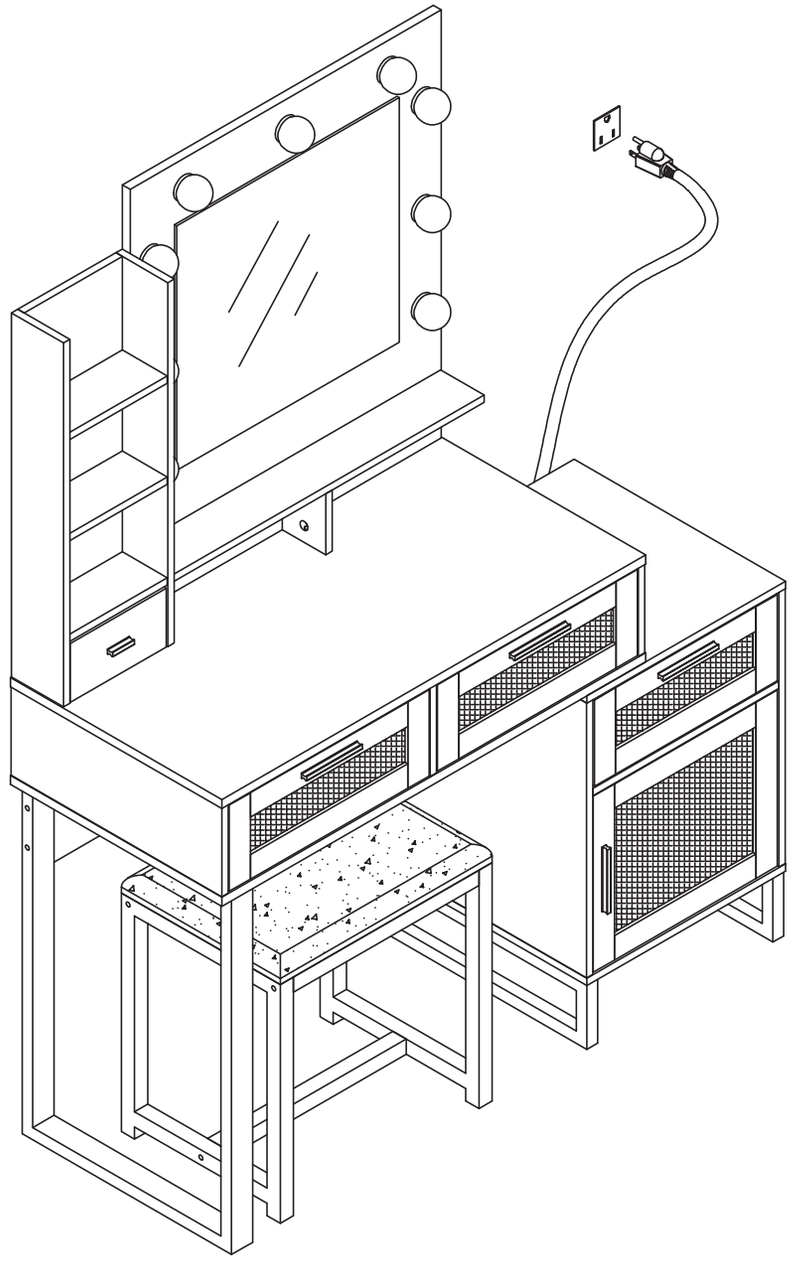
x 4pcs